DH-XVR4104C-I

4 Channels Penta-brid 1080N/720p Smart 1U 1HDD WizSense Digital Video Recorder



WizSense

Launched by Dahua Technology, WizSense is a series of AI products and solutions that adopt independent AI chip and deep learning algorithm. It focuses on human and vehicle with high accuracy, enabling users to fast act on defined targets. Based on Dahua's advanced technologies, WizSense provides intelligent, simple and inclusive products and solutions.

Series Overview

Dahua Technology, a world-leading video-centric smart IoT solution and service provider, debuted its new XVR series, XVR4000-I Series featuring max.full-channel SMD Plus to benefit customers from AI upgrade (The number of channels differs depending on the model. Please refer to the specifications below for information on the number of channels.). This series has been developed to reduce false-alarm rates and the cost of human surveillance, thus bringing great value to customers in search of products with accurate human/vehicle alarm to raise the security level of various indoor and outdoor facilities.

Functions

SMD Plus

With intelligent algorithm, Dahua Smart Motion Detection technology can categorize the targets that trigger motion detection and filter the motion detection alarm triggered by non-concerned targets to realize effective and accurate alarm.

Smart Dual Illuminators

With Smart Dual Illuminators technology, you can select Smart Illumination Mode for the system to automatically switch between IR mode and white light mode. It allows white light to be turned on when a target is detected by the SMD Plus/Perimeter Protection function of AI-enabled XVR. This significantly reduces light pollution at night. Together with other modes, including IR Mode and White Light Mode, the smart dual illumination technology can meet the requirements of a wide variety of scenes.

One-click Arming/Disarming

With just one click, you can enable or disable alarm linkages to show messages, send emails, output audio alarms and more, through the mobile app and platform.

- H.265+/H.265 dual-stream video compression
- Supports Full-channel AI-Coding
- Supports HDCVI/AHD/TVI/CVBS/IP video inputs
- Max 5 channels IP camera inputs, each channel up to 2MP; Max 32 Mbps incoming bandwidth
- Up to 4 channels video stream (analog channel) SMD Plus



Customizable Alarm Audio

Designed for your convenience, the TiOC alarm can be customized to meet your needs. It is flexible, allowing you to directly upload your customized audio through the mobile app and XVR.

AI Coding

Compared with H.265/H.264, AI coding can reduce more than 50% bit rate and storage requirements without loss of decoding compatibility, providing clear human and vehicle details.

Smart H.265+

Smart H.265+ Codec reduces bit rate and storage requirements by up to 90%, outranking standard H.264 video compression and eliminating the need to invest in a new camera.

Long-distance Transmission

The HDCVI system supports long distance transmission over coaxial cable and UTP, max. 700 m for 4K/4MP, 800 m for 1080p and 1200 m for 720p.

Audio over Coax

The integrated design can reduce wiring troubles which makes it much more cost-effective and convenient for installation.

Technical Specification

System

Main Processor	Industrial-grade processor
Operating System	Embedded Linux
Operating Interface	Web; Local GUI

SMD Plus

SMD Plus by Recorder	4-channel: Secondary filtering for human and motor vehicle , reducing false alarms caused by leaves, rain and lighting condition change

Audio and Video

Analog Camera Input	4 channels, BNC: adaptive access by default; HDCVI, AHD, TVI and CVBS access can be configured.
Camera Input	1. CVI: 1080p@ 25/30 fps, 720p@25/30 fps 2. TVI: 1080p@ 25/30 fps, 720p@25/30 fps 3. AHD: 1080p@ 25/30 fps, 720p@25/30 fps 4. CVBS: PAL/NTSC
IP Camera Input	Up to 5 channels of IPC access 1 IP channels by default + 4 channels (analog channels are converted to IP channels) incoming bandwidth: 32 Mbps, recording bandwidth: 32 Mbps and outgoing bandwidth: 32 Mbps *After IP channels are added beyond the existing channels, the AI Function (SMD) will be disabled.
Encoding Capacity	Main Stream: All channels 1080N/720p/960H/D1/CIF/(1 fps–25/30 fps) Sub stream: CIF/(1 fps–15 fps)
Dual-stream	Yes
Video Bit Rate	32 kbps–6144 kbps
Audio Sampling	8 kHz, 16 bit
Audio Bit Rate	64 kbps
Video Output	1 HDMI, 1 VGA HDMI/VGA : 1920 × 1080, 1280 × 1024, 1280 × 720
Multi-screen Display	When IP extension mode not enabled: 1/4 When IP extension mode enabled: 1/4/6
Third-party Camera Access	ONVIF; RTSP; Panasonic; Sony; Axis; Arecont; Pelco; Canon; Samsung

Compression Standard

Video Compression	AI Coding; H.265+; H.265; H.264+; H.264
Audio Compression	G.711a; G.711u; PCM

Network

Network Protocol	HTTP; HTTPS; TCP/IP; IPv4; RTSP; UDP; SMTP; NTP; DHCP; DNS; DDNS; P2P
Mobile Phone Access	iOS, Android
Interoperability	ONVIF 21.06; CGI Conformant
Browser	Chrome IE9 or later Firefox
Network Mode	Single-address mode

Recording Playback

Record Mode	General, motion detection,alarm
Recording Playback	1/4
Backup Method	USB device and network
Playback Mode	Instant playback, general playback, event playback, tag playback

Alarm

General Alarm	Motion detection, video loss, tampering
Anomaly Alarm	No disk, disk error, low space, offline, ip conflict, MAC conflict
Alarm Linkage	Record, snapshot (panoramic), IPC external alarm output, access controller, voice prompt, buzzer, log, preset, email

Ports

Audio Input	1-channel RCA 4-channel BNC (Coaxial Audio)
Audio Output	1-channel RCA
Two-way Talk	Yes (share the same audio input with the first channel)
HDD Interface	1 SATA port, up to 16 TB. The maximum HDD capacity varies with environment temperature.
USB	2 USB ports (USB 2.0)
HDMI	1
VGA	1
Network Port	1 (10/100 Mbps Ethernet port, RJ-45)

General

Power Supply	12 VDC, 1.5 A
Power Consumption	< 4 W
Net Weight	0.47 kg (1.03lb)
Gross Weight	1.04 kg (2.30 lb)
Product Dimensions	204.6 mm × 210.9 mm × 45.6 mm (8.06'' × 8.30'' × 1.80'') (W × D × H)
Packaging Dimensions	256.0 mm × 330.0 mm × 101.0 mm (10.08" × 12.99" ×3.98") (W × D × H)
Operating Temperature	–10 °C to +55 °C (+14 °F to +131 °F)
Operating Humidity	0%–90% (RH)
Installation	Desktop
Certifications	FCC: Part 15 Subpart B CE: CE-LVD: EN 60950-1/IEC 60950-1 CE-EMC: EN 61000-3-2; EN 61000-3-3; EN 55032; EN50130; EN 55024

Ordering Information

Type	Model	Description
4 Channels WizSense XVR	DH-XVR4104C-I	Smart 1U WizSense Digital Video Recorder

Dimensions (mm[inch])

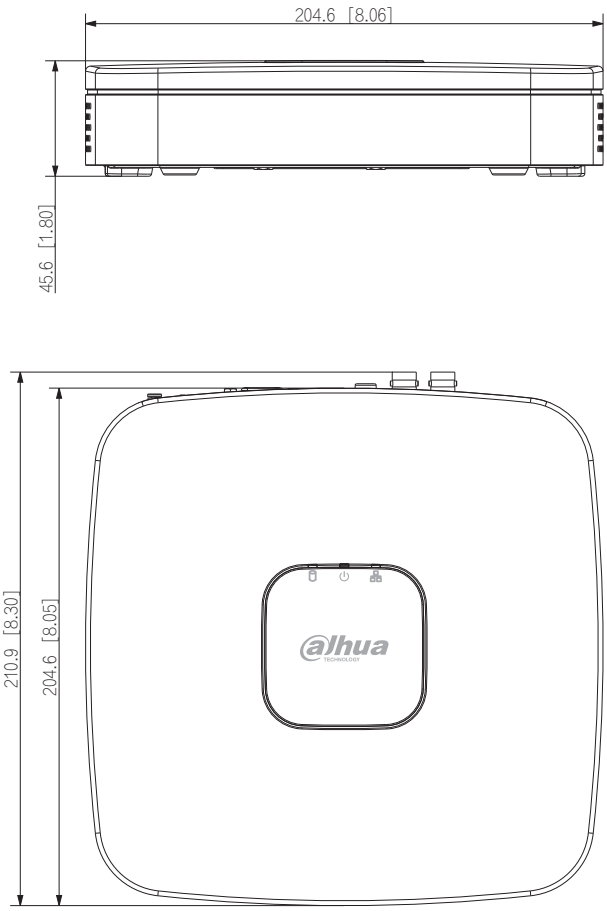

Panels

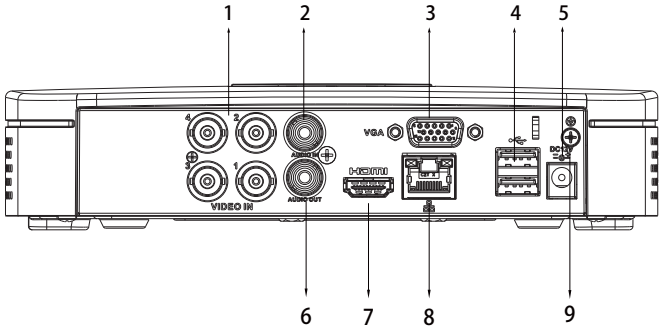

1 VIDEO IN
2 AUDIO IN, RCA Connector
3 VGA Port
4 USB Ports
5 Power Input
6 AUDIO OUT, RCA Connector
7 HDMI Port
8 Network Port
9 Ground

Rev 002.000 © 2022 Dahua. All rights reserved. Design and specifications are subject to change without notice.
The images, specifications and information mentioned in the document are only for reference, and might differ from the actual product.