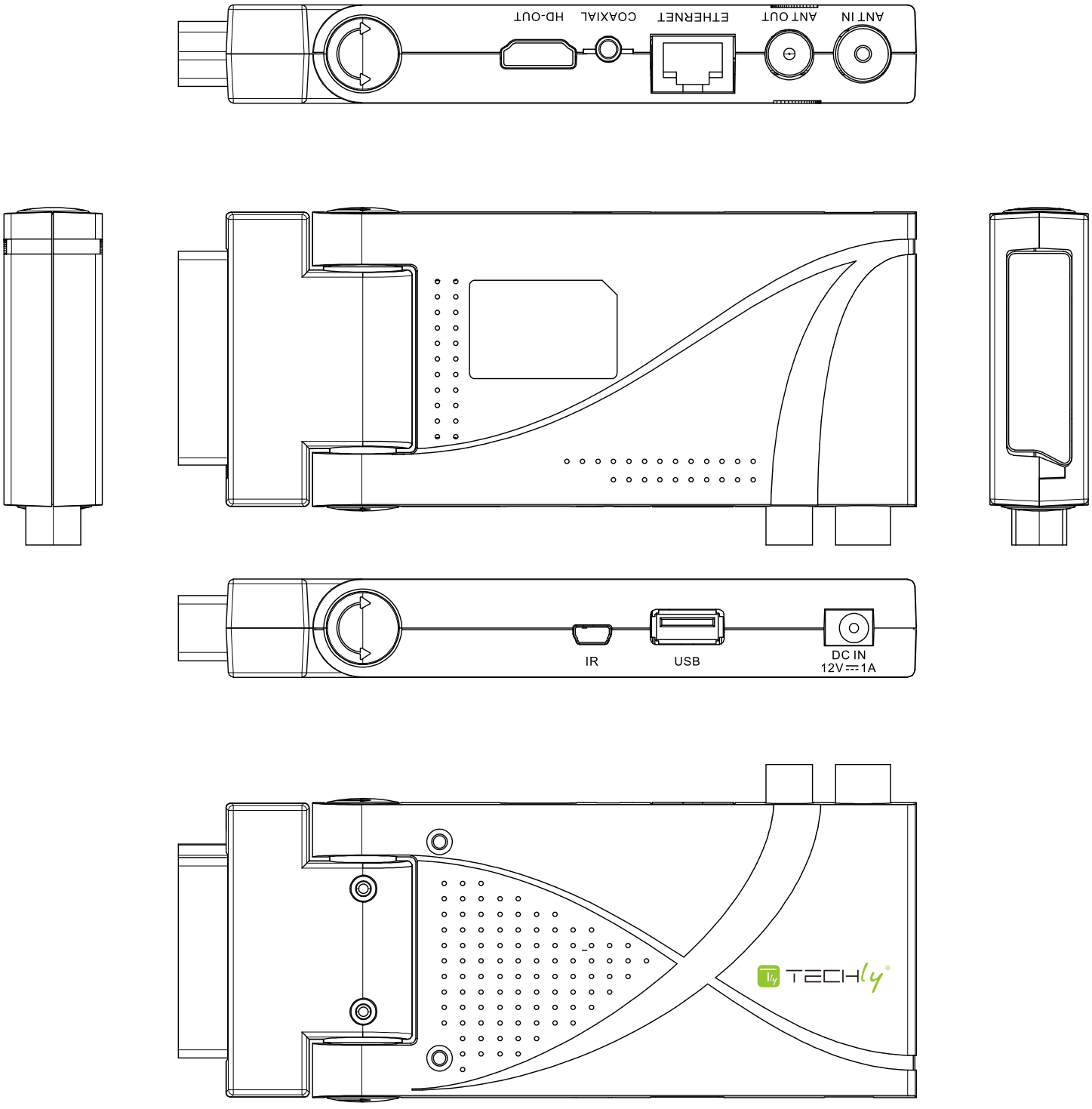

IDATA-TV-DT2SCA

TECHly®
The Modern IT brand