

USB-C™ High Speed Sync & Charging Cable

USB-A male to USB-C male

Part No.: **CUB1301**

Connect your USB-C devices to PC/Notebook or power adapter.

Features:

» USB-A male to USB-C male
» Gold plated connector
» Cable Length: 1M

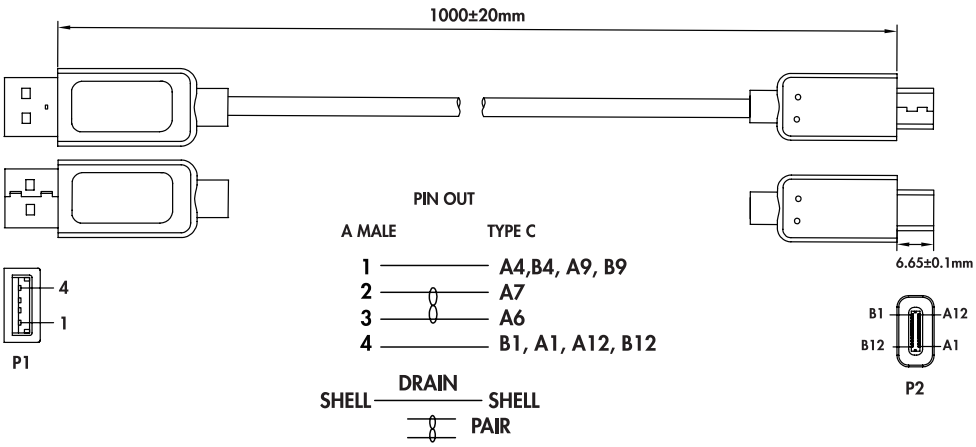

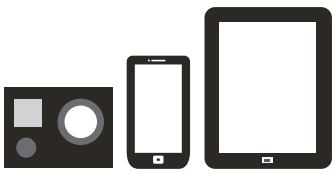



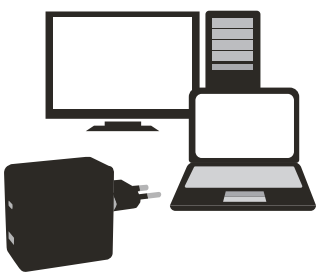

1M Length | HQ High Quality | HI-SPEED

Package Contents:

» 1 x USB2.0 USB-AM to USB-CM Cable

Package Informations:

» Packing Dimension: mm
» Packing Weight: kg
» Carton Dimension: mm
» Carton Q'ty: pcs
» Carton Weight: kg

RoHS compliant

*The specifications and pictures are subject to change without prior notice.
*All trade names referenced are the registered trademarks of their respective owners.

CUB1301
4 052792 060935

Made in China