

Installation Guide

Quality, Design and Innovation



home.liebherr.com/fridge-manuals

LIEBHERR

Contents

1	**General safety instructions**	**2**
2	**Installation conditions**	**3**
2.1	Location	3
2.2	Building the appliance into kitchen units	3
2.3	Installing multiple appliances	4
2.4	Mains connection	5
3	**Installation dimensions**	**5**
4	**Ventilation requirements**	**5**
5	**Transporting the device**	**5**
6	**Unpacking the appliance**	**5**
7	**Mounting wall spacers**	**5**
8	**Setting up the appliance**	**5**
9	**Setting up the appliance so that it is level**	**6**
10	**After setting up**	**6**
11	**Disposing of packaging**	**6**
12	**What the symbols mean**	**6**
13	****** freezer compartment door***	**7**
13.1	Moving the door hinge	7
14	**Door hinge change**	**7**
14.1	Removing the soft stop mechanism	8
14.2	Removing the door	9
14.3	Reversing the freezer compartment door*	10
14.4	Moving the upper bearing parts to the other side.	10
14.5	Moving the lower bearing parts to the other side..	11
14.6	Moving the handles to the other side*	12
14.7	Fitting the door	12
14.8	Aligning the door	13
14.9	Fitting the soft stop mechanism	13
15	**Water connection***	**13**
16	**Connecting the water supply***	**14**
17	**Connecting device**	**15**

The manufacturer is continually working on the further development of all types and models. Please be aware that we reserve the right to make changes to the shape, equipment and technology.

Symbol	Explanation
	**Read instructions** Please read the information in these instructions carefully to understand all of the benefits of your new appliance.
	**Full instructions on the internet** You can find detailed instructions on the internet using the QR code on the front of these instruction or by entering the service number at **home.liebherr.com/fridge-manuals**. The service number can be found on the serial tag: 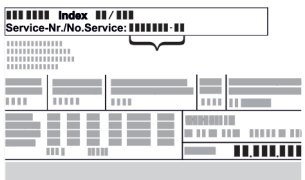 *Fig.* Example illustration

Symbol	Explanation
	**Check appliance** Check all parts for transport damage. If you have any complaints, please contact your agent or customer service.
	**Differences** These instructions apply to a range of models, so differences are possible. Sections that apply to certain models only are marked with an asterisk (*).
	**Instructions and results** Instructions are marked with a ▶. Results are marked with a ▷.
	**Videos** Videos about the appliances are available on the YouTube channels of Liebherr-Hausgeräte.

1 General safety instructions

- Please keep this assembly manual in a safe place so you can refer back to it at any time.
- If you pass the appliance on, please hand this assembly manual to the next user.
- Read this assembly manual carefully before installation and use to ensure safe and correct use of the appliance. Follow the instructions, safety instructions and warning messages included at all times. They are important for ensuring you can operate and install the appliance safely and without any problems.
- First read the general safety instructions in the “General safety instructions” section of the **operating instructions**, which accompany these installation instructions, and follow them. If you cannot find the **operating instructions**, you can download the **operating instructions** from the internet by entering the service number at **home.liebherr.com/fridge-manuals**. The service number can be found on the serial tag:

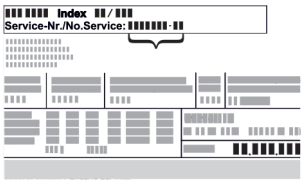

- **Observe the warning messages and other detailed information in the other sections when installing the appliance:**

	DANGER	identifies a situation involving direct danger which, if not obviated, may result in death or severe bodily injury.

* Depending on model and options

⚠	WARNING	identifies a dangerous situation which, if not obviated, may result in death or severe bodily injury.
⚠	CAUTION	identifies a dangerous situation which, if not obviated, may result in minor or medium bodily injury.
	NOTICE	identifies a dangerous situation which, if not obviated, may result in damage to property.
	Note	identifies useful instructions and tips.

2 Installation conditions

⚠ **WARNING**
Fire hazard due to dampness!
If live parts or the mains lead become damp this may cause short circuits.
▶ The appliance is designed for use in enclosed areas. Do not operate the appliance outdoors or in areas where it is exposed to splash water or damp conditions.

Intended use
- Install and use the appliance in indoor spaces only.

2.1 Location

⚠ **WARNING**
Leaking coolant and oil!
Fire. The coolant contained in the appliance is eco-friendly, but also flammable. The oil contained in the appliance is flammable. Escaping coolant and oil can ignite if the concentration is high enough and in contact with an external heat source.
▶ Do not damage the pipelines of the coolant circuit and the compressor.

- If the appliance is installed in a very humid environment, condensation can build up on the outside of the unit. Always make sure the installation location is well ventilated .
- The more coolant there is in the appliance, the larger the room in which the appliance is installed must be. If the room is too small, any leak may create a flammable mixture of gas and air. For each 8 g of coolant the installation space must be at least 1 m^3. Information on the coolant is on the model plate inside the appliance.

2.1.1 Supporting floor

- The floor of the installation site must be horizontal and even.
- The surface supporting the appliance must be at the same level as the surrounding floor.

2.1.2 Positioning

- Do not install the appliance in direct sunlight, next to an oven, radiator or similar.
- Install the appliance with the rear panel up against the wall and always use the supplied wall spacers (see below).

2.2 Building the appliance into kitchen units

The appliance can be built into kitchen units.

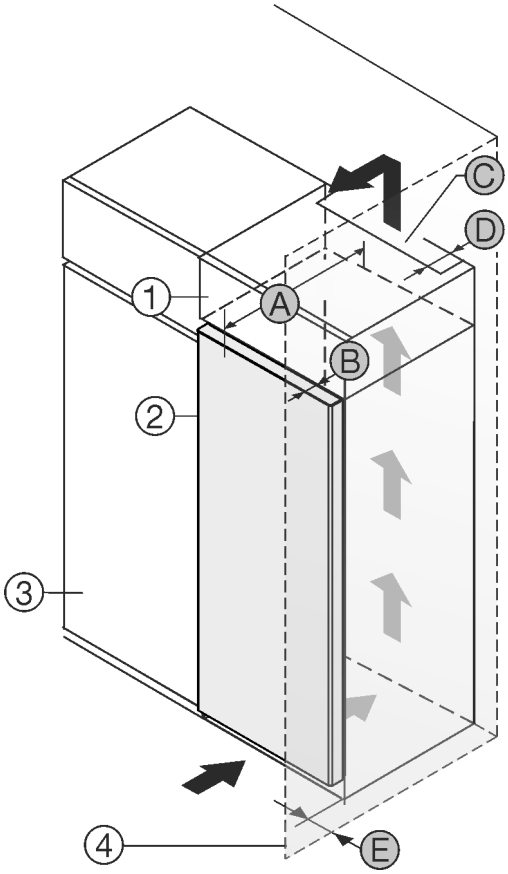

*Fig. 1 **

(1) Top cupboard
(2) Appliance
(3) Kitchen cabinet
(4) Wall
(A) Appliance depth
(B) Door depth
(C) Ventilation cross section
(D) Distance to the back of the appliance
(E) Distance to the side of the appliance

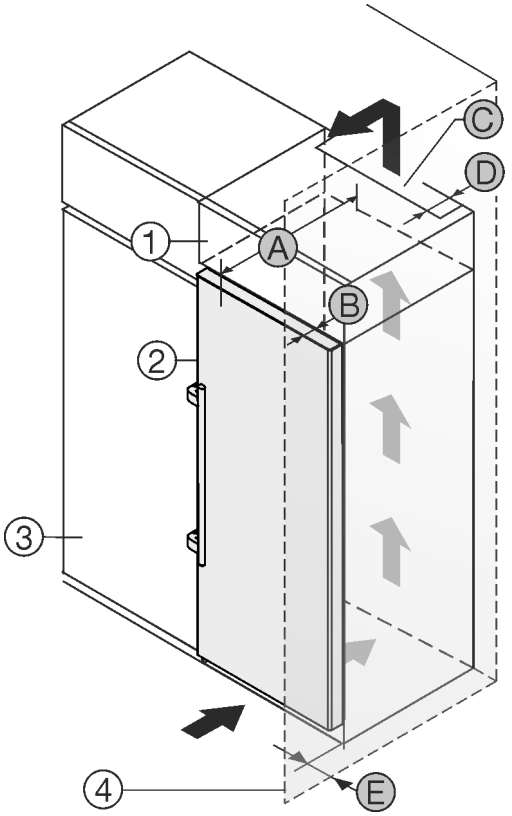

Fig. 2 *

(1) Top cabinet
(2) Appliance
(3) Kitchen cabinet
(4) Wall
(A) Appliance depth
(B) Door depth
(C) Ventilation cross section
(D) Distance to the back of the appliance
(E) Distance to the side of the appliance

A*	B*	C*	D*	E*
675 mm[x]	65 mm	Min.300 cm²	Min.50 mm	Min.13 mm

Appliances without handle / with recessed grip

A*	B*	C*	D*	E*
675 mm[x]	75 mm	Min.300 cm²	Min.50 mm	Min.57 mm

Appliances with lever handle

Set up the appliance directly next to the kitchen cabinet *Fig. 1 (3)*.*

There must be a ventilation shaft at the depth *Fig. 1 (D)* of the back of the top cupboard over the entire width of the top cupboard.*

The ventilation cross-section *Fig. 1 (C)* must be maintained under the ceiling.*

If the appliance is set up with the hinges next to a wall *Fig. 1 (4)*, the distance between the appliance and the wall must be at least 13 mm.*

If the appliance is set up with the hinges next to a wall *Fig. 1 (4)*, the distance between the appliance and the wall must be at least 20 mm.*

If the appliance is set up with the hinges next to a wall *Fig. 1 (4)*, the distance between the appliance and the wall must be at least 57 mm. This is how far the handle protrudes when the door is open.*

In order to be able to fully open the door, the appliance must protrude by the depth of the door *Fig. 1 (B)* from the front of the kitchen cabinet. The appliance may protrude further depending on the depth of the kitchen cabinets *Fig. 1 (3)* and whether wall spacers are used.*

Set up the appliance directly next to the kitchen cabinet *Fig. 2 (3)*.*

There must be a ventilation shaft at the depth *Fig. 2 (D)* of the back of the top cupboard over the entire width of the top cupboard.*

The ventilation cross-section *Fig. 2 (C)* must be maintained under the ceiling.*

If the appliance is set up with the hinges next to a wall *Fig. 2 (4)*, the distance between the appliance and the wall must be at least 57 mm. This is how far the handle protrudes when the door is open.*

In order to be able to fully open the door, the appliance must protrude by the depth of the door *Fig. 2 (B)* from the front of the kitchen cabinet. The appliance may protrude further depending on the depth of the kitchen cabinets *Fig. 2 (3)* and whether wall spacers are used.*

Note
Please contact Customer Services to acquire a kit to limit the door opening angle to 90° for appliances with soft close mechanisms.

Ensure that the following conditions are met:

- Recess dimensions are adhered to .
- Ventilation requirements are complied with (see 4 Ventilation requirements) .

2.3 Installing multiple appliances

NOTICE
Risk of damage due to condensate!
▶ Do not install the appliance directly alongside a further refrigerator/freezer.

These appliances are designed for a variety of installation options. Combine appliances only if the appliance is suitable. The following table shows the installation options by model:

Installation option	Model
Single	All models
Side-by-side (SBS)	Model names starting with **S...**. See the supplied SBS installation guide for the correct positioning.
Side-by-side with a gap of 70 mm between appliances Otherwise condensation will build up between the units.	All models without side wall heating 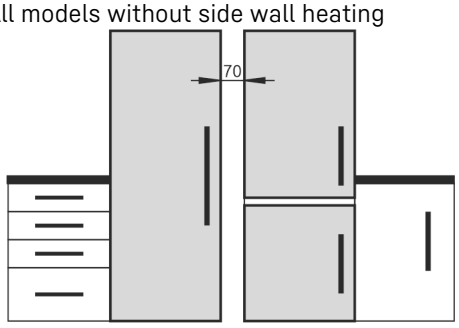 *Fig. 3*

Assemble the appliances together, following their specific installation instructions.

*** Depending on model and options**

2.4 Mains connection

WARNING
Improper use!
Fire. If a mains cable/plug comes into contact with the back of the appliance, the mains cable/plug can be damaged by appliance vibrations and this may result in a short circuit.
- ▶ Stand the appliance so that it is not touched by connectors or main cables.
- ▶ Do not connect any appliances to sockets in the area of the back of the appliance.
- ▶ Multi-sockets/power distributors and other electronic appliances (such as halogen transformers) may not be placed and operated at the back of appliances.

3 Installation dimensions

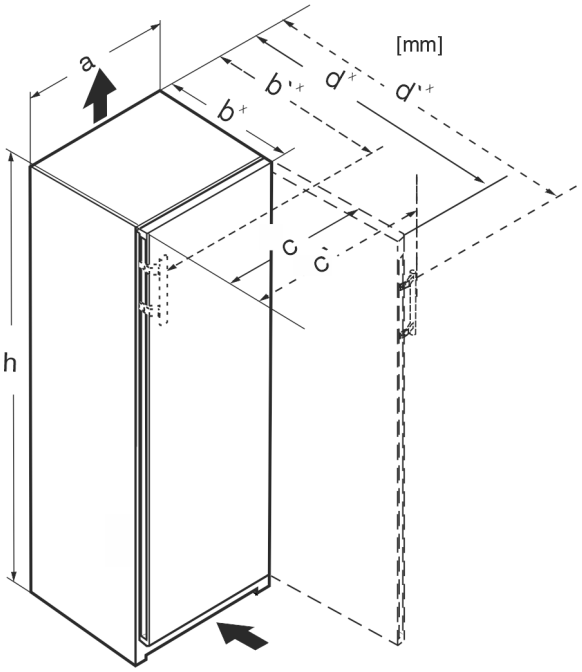

Fig. 4

	h	a	b	b'	c	c'	d	d'
RBa 4250	1255	597	675[x]	719[x]	609	654	1215[x]	1222[x]
R(sd)d 5250	1855	597	675[x]	719[x]	609	654	1215[x]	1222[x]
RB(sd)(bsc)(d) 5250	1855	597	675[x]	719[x]	609	654	1215[x]	1222[x]
SR(B)sdd 5250	1855	597	675[x]	719[x]	609	654	1215[x]	1222[x]
RBstd 528i	1855	597	675[x]	–	609	–	1217[x]	–
SRB(bs)(st)d 528i	1855	597	675[x]	–	609	–	1217[x]	–
RBbsc 5280	1855	597	675[x]	–	609	–	1217[x]	–
SRBstd 5280	1855	597	675[x]	–	609	–	1217[x]	–
SRB(bs)(st)d 529i	1855	597	675[x]	719[x]	609	654	1215[x]	1222[x]
SRBsdd 5260	1855	597	675[x]	719[x]	609	654	1215[x]	1222[x]

[x] For appliances with supplied wall spacers, the dimensions must be increased by 15 mm .

4 Ventilation requirements

NOTICE
Danger of overheating due to insufficient air ventilation!
The compressor may be damaged if there is insufficient air ventilation.
- ▶ Take care to ensure adequate air ventilation.
- ▶ Observe the ventilation requirements.

If the appliance is integrated into a fitted kitchen, the following ventilation requirements must be adhered to:
- There are spacer fins at the back of the appliance to provide sufficient ventilation. Make sure that these are not positioned in recesses or openings.
- As a rule, the larger the ventilation space the more efficiently the appliance can run.

5 Transporting the device

- ▶ Transport the appliance in its packaging.
- ▶ Transport the appliance upright.
- ▶ Use two people to transport the appliance.

6 Unpacking the appliance

Before you connect the appliance, report any damage immediately to the delivery company.
- ▶ Check the appliance and the packaging for damage during transport. Contact the supplier immediately if you suspect any level of damage.
- ▶ Remove all materials from the back or the side walls of the appliance that may prevent proper installation or ventilation.
- ▶ Remove all protective films from the appliance. Do not use sharp or pointed objects for this.

7 Mounting wall spacers

The wall spacers must be used to achieve the declared energy consumption value and to prevent condensation in the event of high surrounding humidity. This increases the appliance depth by approx. 15 mm. The appliance will work perfectly well without the spacers but will consume slightly more energy.
- ▶ If your appliance is supplied with wall spacers, mount these on the back of the appliance, bottom left and right.

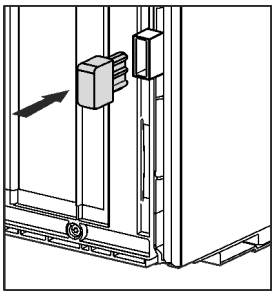

8 Setting up the appliance

CAUTION
Risk of injury!
- ▶ The appliance must be transported to its place of installation by two people.

CAUTION
Risk of injury and damage!
The door may strike the wall and be damaged as a result. In the case of glass doors, the damaged glass may cause injuries!
- ▶ Protect the glass door from striking against the wall. Fit a door stop, e.g. one made of felt, to the wall.
- ▶ A limiter restricting door opening to 90° can be ordered from the aftersales service.

WARNING
Unstable appliance!
Risk of injury and damage. The appliance can topple over.
- ▶ Attach the appliance according to the operating instructions.

WARNING
Fire hazard and danger of damage!
- ▶ Do not place appliances emitting heat e.g. microwaves, toasters etc. on the appliance!

Ensure that the following conditions are met:
- ❑ Only move the device when it is not loaded.
- ❑ Only set up the appliance when someone is available to help.

9 Setting up the appliance so that it is level

CAUTION
Risk of injury or damage from the appliance tipping or the door falling open!
If the additional adjustable foot on the base support is not correctly positioned on the floor, there is a risk of the door falling open or the appliance tipping. This can lead to injury or property damage.
- ▶ Unscrew the additional adjustable foot on the support until it reaches the floor.
- ▶ Then turn it another 90°.

- ▶ Set up the appliance so that it is level using the supplied open-ended wrench to turn the adjustable feet (A) and a spirit level.
- ▶ Then prop up the door: Turn the adjustable foot (B) on the bearing bracket until it comes into contact with the floor, then turn an additional 90°.

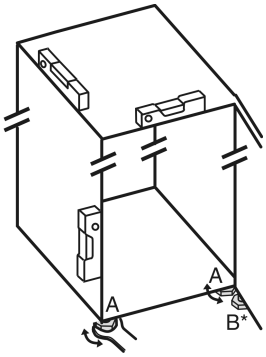

- ▶ Then prop up the door: Turn the adjustable foot on the bearing bracket (B) using the open-ended wrench SW10 until it comes into contact with the floor, then turn an additional 90°.

10 After setting up

- ▶ Take off the protective film from the exterior of the appliance.
- ▶ Take off the protective film from the trim panels.
- ▶ Take off the protective film from the trim panels and drawer fronts.
- ▶ Take off the protective film from the stainless steel rear panel.
- ▶ Remove all transport safety components.
- ▶ Clean the appliance .
- ▶ Note the type (model, number), appliance designation, appliance/serial number, purchase date and dealer's address in the fields provided for this .

11 Disposing of packaging

WARNING
Danger of suffocation due to packing material and plastic film!
- ▶ Do not allow children to play with packing material.

The packaging is made of recyclable materials:
- corrugated board/cardboard
- expanded polystyrene parts
- polythene bags and sheets
- polypropylene straps
- nailed wooden frame with polyethylene panel*
- ▶ Take the packaging material to an official collecting point.

12 What the symbols mean

	Risk of injury here! Follow the safety notes!
	These instructions apply to a range of models. Follow this step only if it applies to your appliance.
	To install, please follow the detailed description in the Guide.
	This section applies either to a single-door appliance or a double-door appliance.
	Choose one of the options: Appliance with right-hinged door or appliance with left-hinged door.
	Installation step required if your model has IceMaker and/or Infinity-Spring.
	Just loosen the screws or tighten them slightly.
	Tighten the screws.

*** Depending on model and options**

	Check to see if the next step applies for your model.
	Check the correct assembly/seat of the components used.
	Measure the specified measurement and adjust if necessary.
	Tool for assembly: Metre rule
	Tool for assembly: Cordless screwdriver and attachments
	Tool for assembly: Spirit level
	Tool for assembly: Size 7 and size 10 spanners
	Two people are required for this step.
	Carry out this step at the marked place on the appliance.
	Aids for assembly: String
	Aids for assembly: Square
	Aids for assembly: Screwdriver
	Aids for assembly: Scissors
	Aids for assembly: Non-permanent marker pen
	Accessory kit: Remove components
	Dispose of components that are no longer needed.

13 **** freezer compartment door*

It is very easy to reposition the hinge of the **** freezer compartment door if the main door hinge is swapped. If the main door of the appliance can be opened to more than 115° (1), you can open the freezer compartment without repositioning the hinge. If the opening angle (2) of the appliance door is less than this, the hinge must be repositioned.

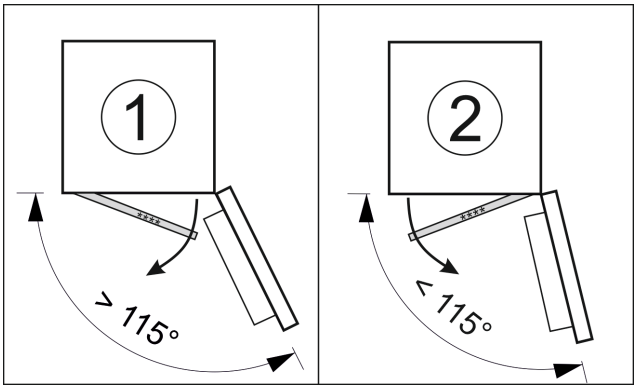

Fig. 5

13.1 Moving the door hinge

The slider for moving the door hinge is located on the back of the **** freezer compartment door at the bottom.

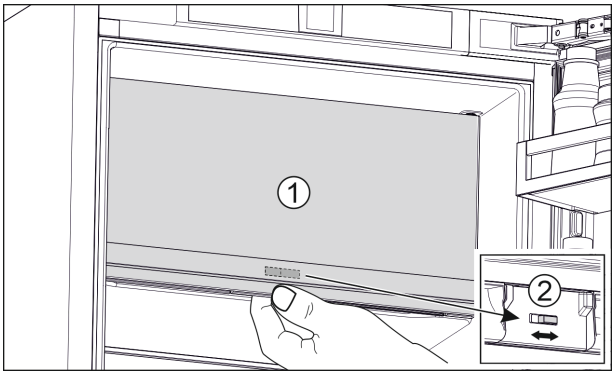

Fig. 6

▶ Close the **** freezer compartment door (1).
▶ Grab the **** freezer compartment door from below.
▶ Move the slider (2) either to the right or to the left.

14 Door hinge change

Tools

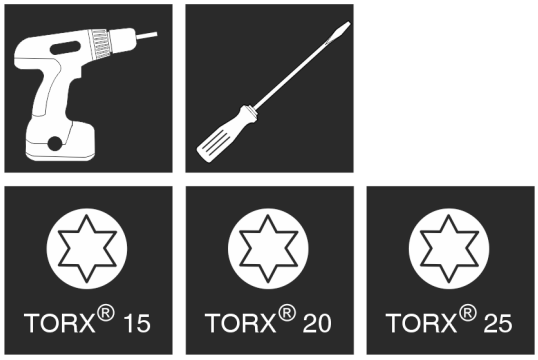

Fig. 7

WARNING
Danger of injury due to door falling out!
If the bearing parts are not screwed on tightly enough, the door may fall out. This can result in serious injuries. In addition, the door may not close with the result that the appliance does not cool properly.
- ▶ Screw on the bearing brackets/bearing pins tightly with 4 Nm.
- ▶ Check all screws and retighten them if necessary.

NOTICE
Risk of condensation damage for Side-by-Side appliances!
Certain appliances can be set up as Side-by-Side combinations (two appliances next to each other).
If your appliance is **a Side-by-Side (SBS) appliance**:
- ▶ Set up the SBS combination in accordance with the enclosed document.

If the **positioning of the devices is stipulated**:
- ▶ Do not change the door hinges over.

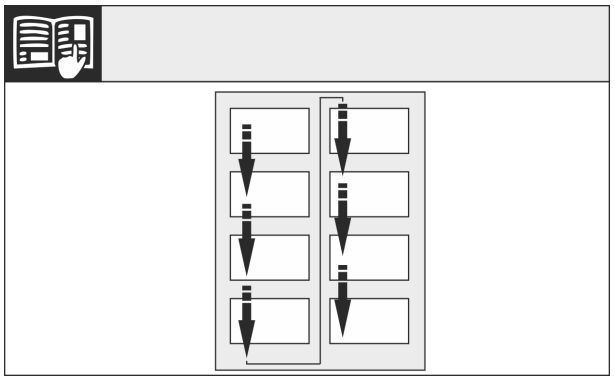

Fig. 8

Remember the reading direction.

14.1 Removing the soft stop mechanism

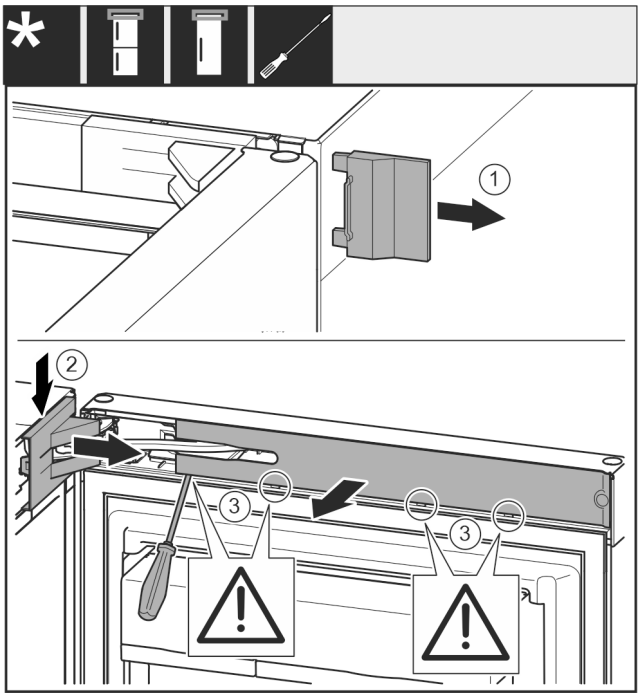

Fig. 9

- ▶ Open the door.

NOTICE
Risk of damage!
If the door seal is damaged, the door may fail to close properly and the cooling will be inadequate.
- ▶ Do not damage the door seal with the screwdriver!

- ▶ Remove the outer cover. *Fig. 9 (1)*
- ▶ Disengage and release the bearing bracket cover. Remove the bearing bracket cover. *Fig. 9 (2)*
- ▶ Unlatch the panel with a slotted screwdriver and swivel it to one side. *Fig. 9 (3)*

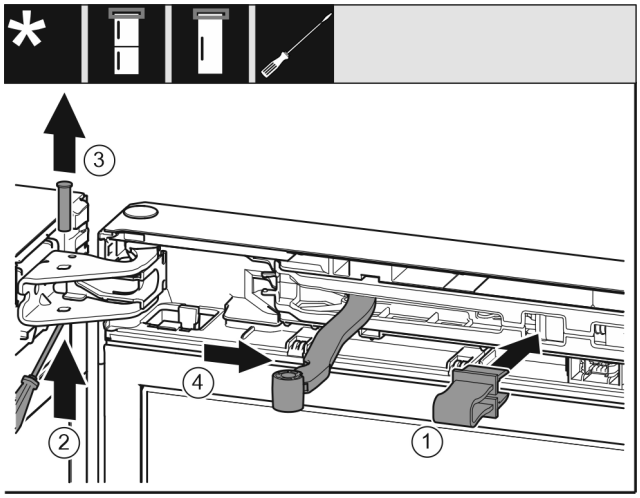

Fig. 10

CAUTION
Crushing hazard by joint folding up!
- ▶ Engage safety device.

- ▶ Engage the locking device in the opening. *Fig. 10 (1)*
- ▶ Push out the bolt with a screwdriver. *Fig. 10 (2)*
- ▶ Remove the bolt upwards. *Fig. 10 (3)*
- ▶ Turn the hinge in the direction of the door. *Fig. 10 (4)*

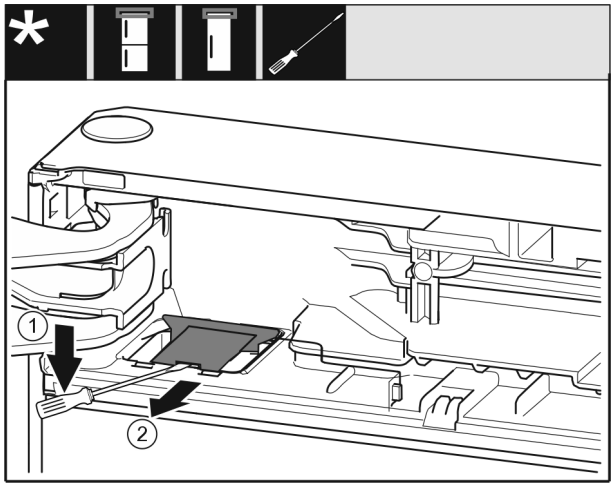

Fig. 11

- ▶ Unlatch the cover with a slotted screwdriver and lift it up. *Fig. 11 (1)*
- ▶ Take out the cover. *Fig. 11 (2)*

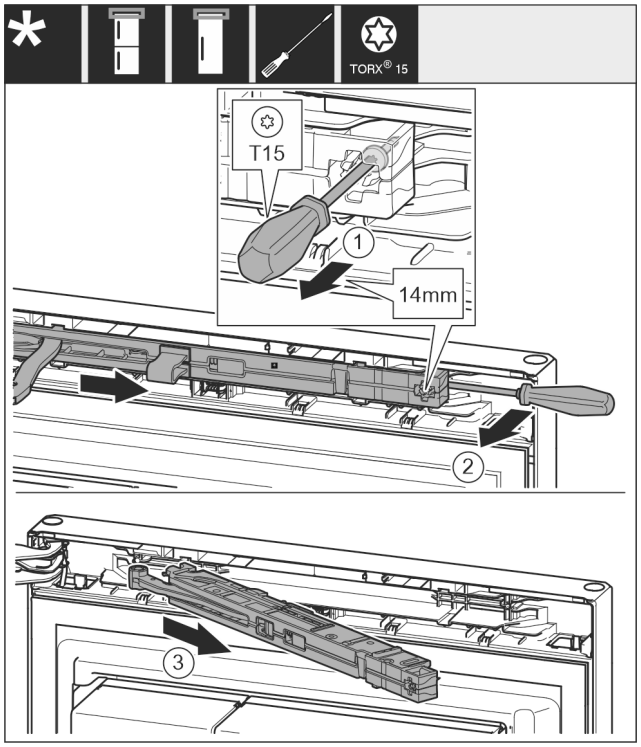

Fig. 12

- ▶ Undo the soft stop mechanism screw with a T15 screwdriver approx. 14 mm. *Fig. 12 (1)*
- ▶ Insert a screwdriver behind the soft stop mechanism on the handle side and rotate the unit forwards. *Fig. 12 (2)*
- ▶ Remove the soft stop mechanism. *Fig. 12 (3)*

14.2 Removing the door

Note

- ▶ Remove any food from the door racks before removing the door, so that no food falls out.

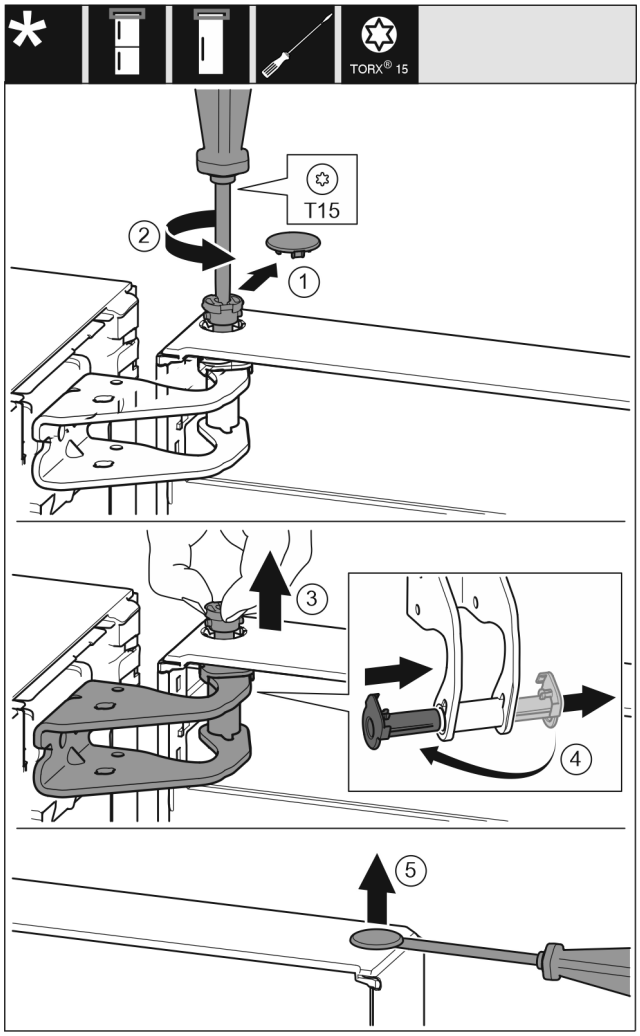

Fig. 13

CAUTION

Risk of injury if the door tips!

- ▶ Take good hold of the door.
- ▶ Set down the door carefully.

- ▶ Carefully remove the protective cover. *Fig. 13 (1)*
- ▶ Undo the bolt a little with a T15 screwdriver. *Fig. 13 (2)*
- ▶ Hold the door and remove the bolts with your fingers. *Fig. 13 (3)*
- ▶ Pull the bearing bush out of the guide. Insert from the other side and latch into place. *Fig. 13 (4)*
- ▶ Lift the door and place it to one side.
- ▶ Carefully lift the plugs out of the door bearing bush with a slotted screwdriver and pull them out. *Fig. 13 (5)*

14.3 Reversing the freezer compartment door*

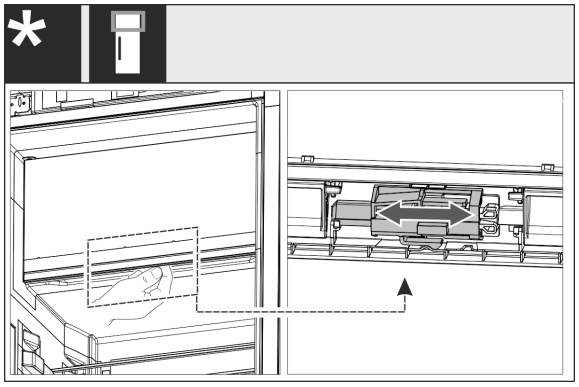

Fig. 14

▶ For single-door appliances: Reverse the door hinge of the 4-star compartment by shifting the lever. The door of the 4-star compartment must be shut for this. Move the lever on the back of the door from below.

14.4 Moving the upper bearing parts to the other side

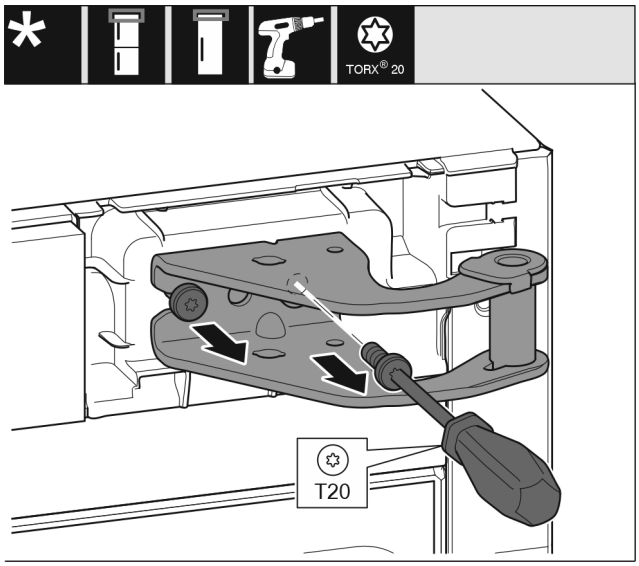

Fig. 15

▶ Remove both screws with a T20 screwdriver.
▶ Lift up and remove the bearing bracket.

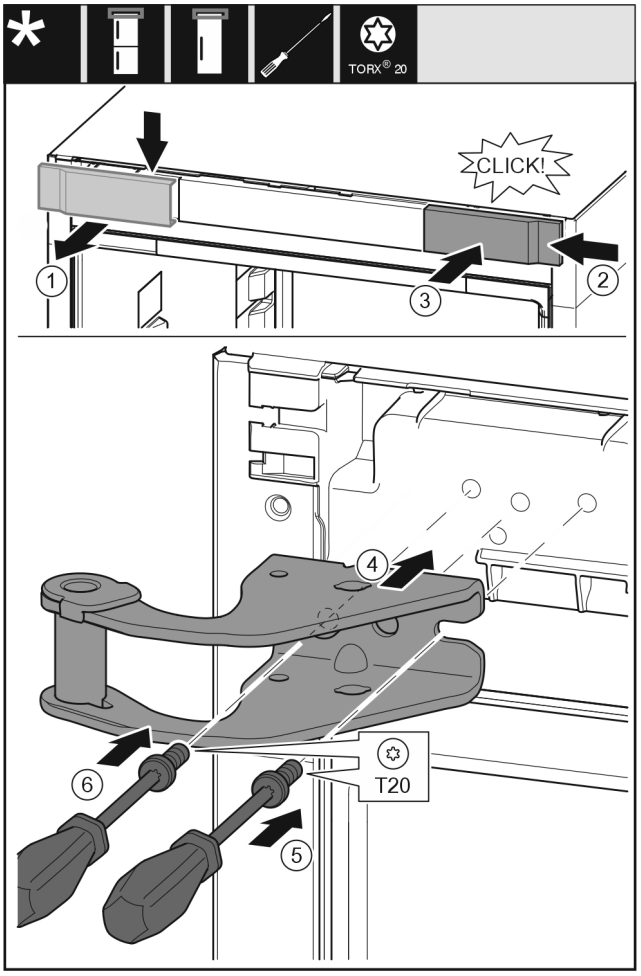

Fig. 16

▶ Take off the cover from above to the front. *Fig. 16 (1)*
▶ Rotate the cover 180° and clip onto the other side from the right. *Fig. 16 (2)*
▶ Latch the cover into place. *Fig. 16 (3)*
▶ Position the upper bearing bracket. *Fig. 16 (4)*
▶ Insert the screw with a T20 screwdriver and tighten it. *Fig. 16 (5)*
▶ Insert the screw with a T20 screwdriver and tighten it. *Fig. 16 (6)*

14.5 Moving the lower bearing parts to the other side

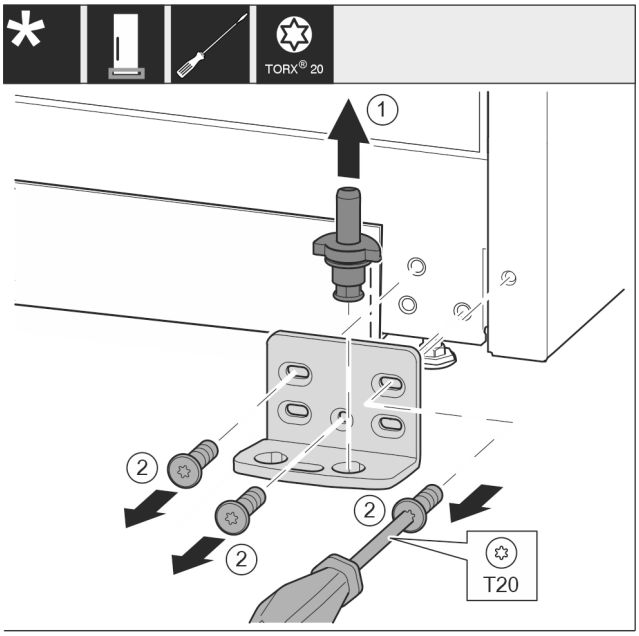

Fig. 17

- ▶ Lift the bearing pin completely upward and pull it out. *Fig. 17 (1)*
- ▶ Take out the screws with a T20 screwdriver and take off the bearing bracket. *Fig. 17 (2)*

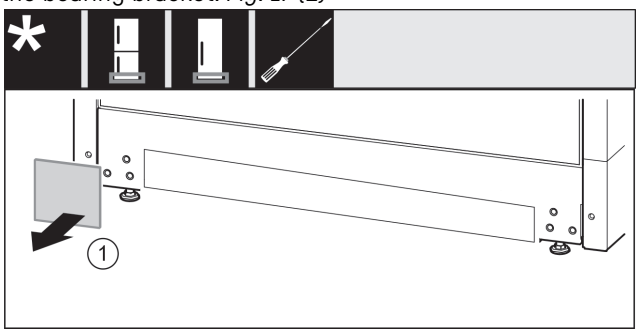

Fig. 18

- ▶ Remove the cover. *Fig. 18 (1)*

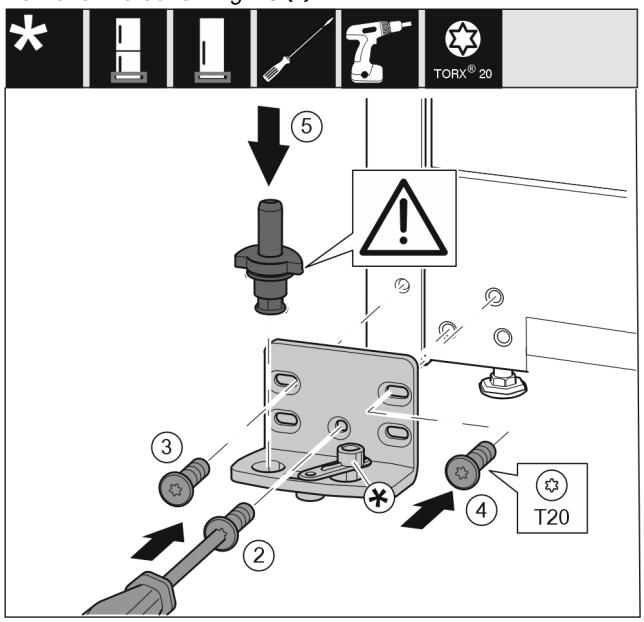

Fig. 19

- ▶ Place the bearing bracket on the other side and screw it on with a T20 screwdriver. Start with screw 2 at the bottom in the middle. *Fig. 19 (2)*
- ▶ Screw in screws 3 and 4 tightly. *Fig. 19 (3,4)*
- ▶ Insert the bearing pin completely. Make sure that the latching lug is pointing to the rear. *Fig. 19 (5)*

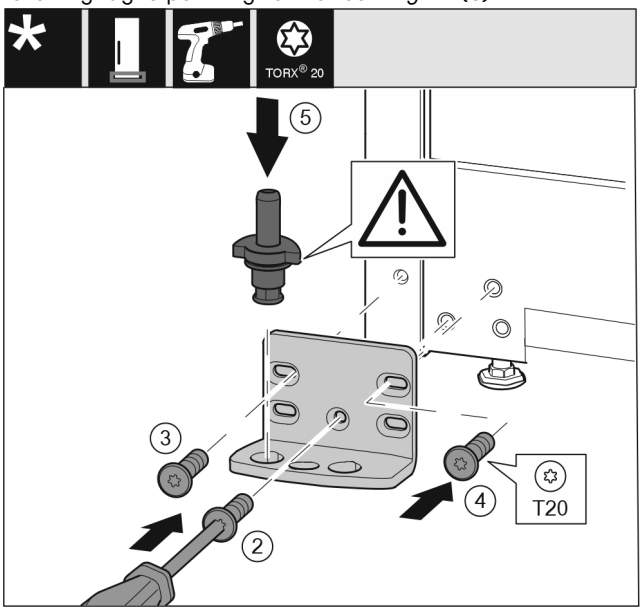

Fig. 20

- ▶ Place the bearing bracket on the other side and screw it on with a T20 screwdriver. Start with screw 2 at the bottom in the middle. *Fig. 20 (2)*
- ▶ Screw in screws 3 and 4 tightly. *Fig. 20 (3,4)*
- ▶ Insert the bearing pin completely. Make sure that the latching lug is pointing to the rear. *Fig. 20 (5)*

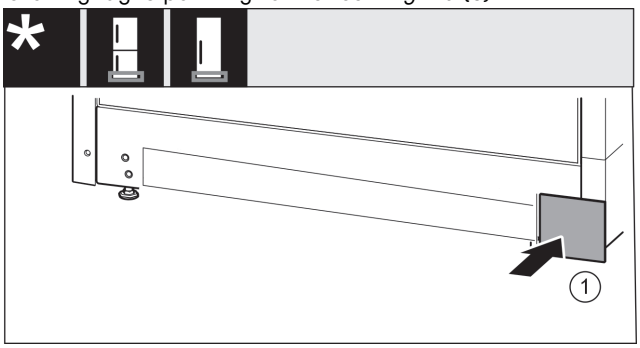

Fig. 21

- ▶ Put the cover back on the other side. *Fig. 21 (1)*

14.6 Moving the handles to the other side*

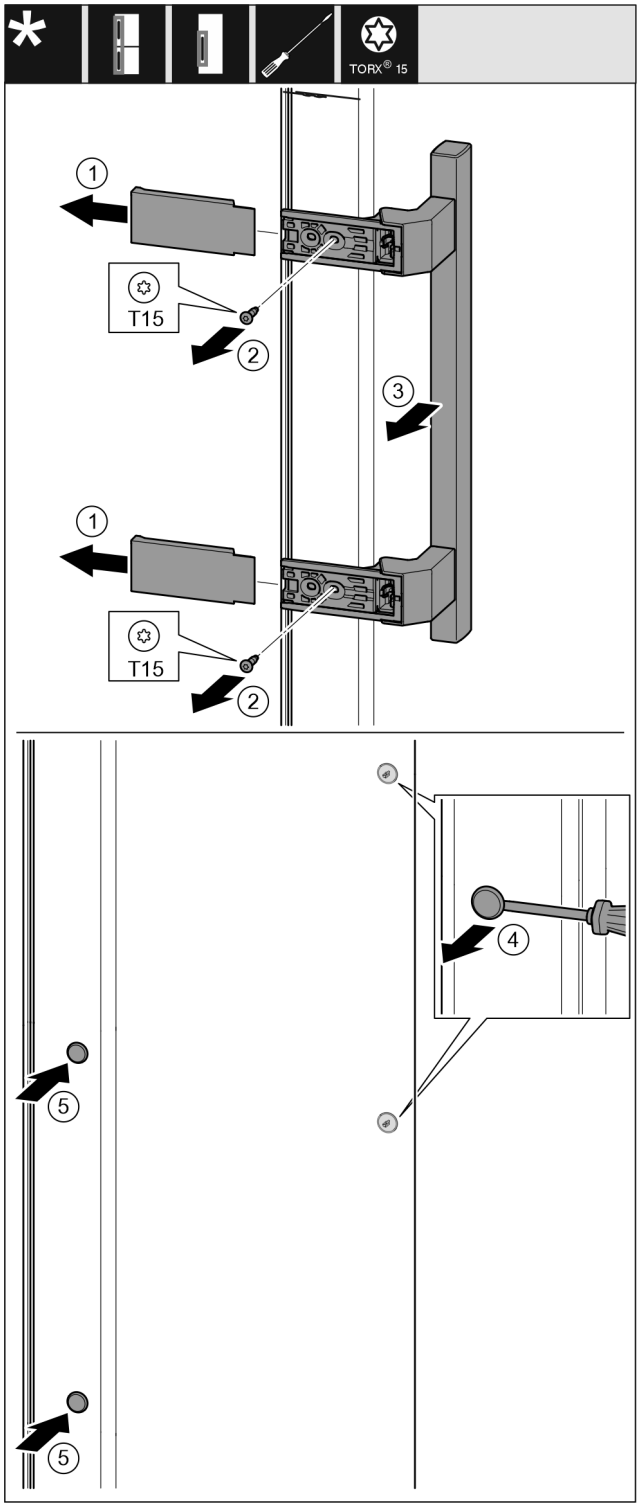

Fig. 22

- ▶ Pull off the cover. *Fig. 22 (1)*
- ▶ Remove the screws with a T15 screwdriver. *Fig. 22 (2)*
- ▶ Take off the handle. *Fig. 22 (3)*
- ▶ Carefully lift up the side plugs with a slotted screwdriver and pull them out. *Fig. 22 (4)*
- ▶ Insert the plugs again on the other side. *Fig. 22 (5)*

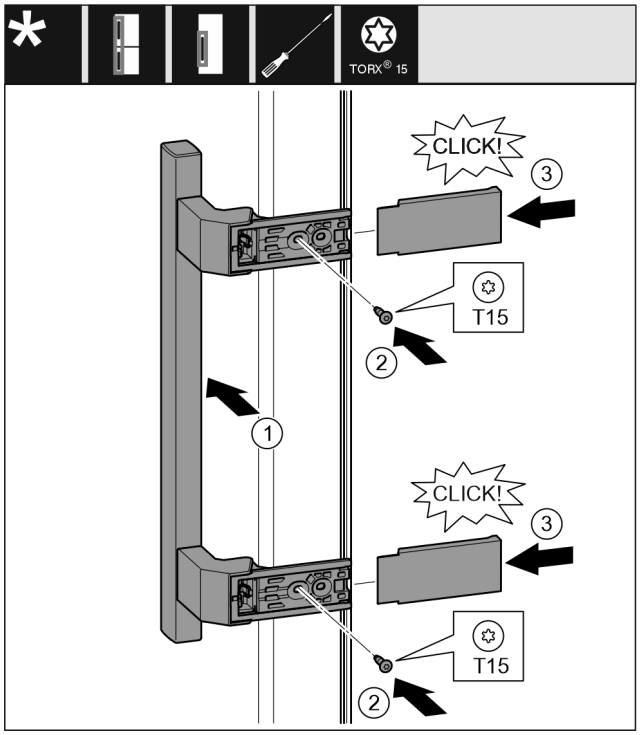

Fig. 23

- ▶ Position the handle on the other side. *Fig. 23 (1)*
- ▷ The screw holes must be exactly above each other.
- ▶ Tighten the screw with a T15 screwdriver. *Fig. 23 (2)*
- ▶ Position the covers on the side and push them on. *Fig. 23 (3)*
- ▷ Ensure that they latch into place.

14.7 Fitting the door

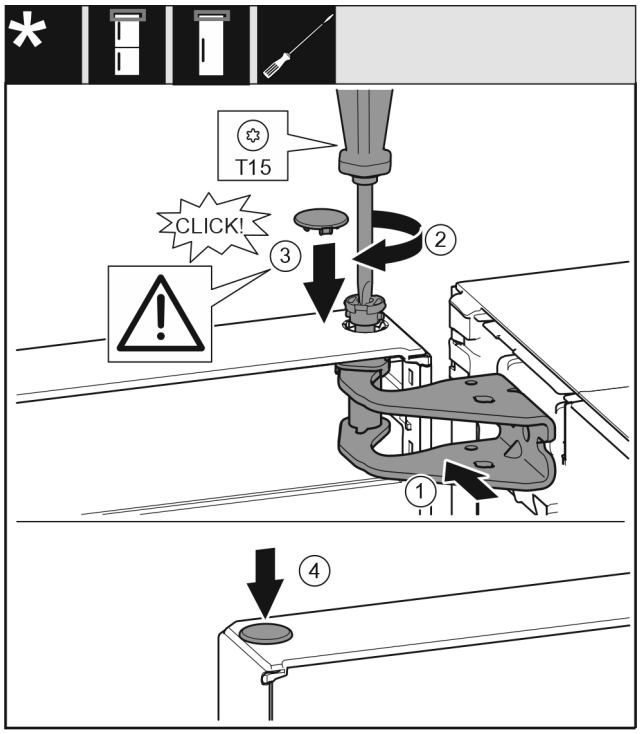

Fig. 24

- ▶ Place the door on the lower bearing pins.
- ▶ Align the top of the door with opening in the bearing bracket. *Fig. 24 (1)*
- ▶ Insert the bolt and tighten with a T15 screwdriver. *Fig. 24 (2)*

▶ Fit the protective cover to protect the door: Insert the protective cover and check that it is flush to the door. If not, insert the bolt fully. *Fig. 24 (3)*
▶ Insert the plugs. *Fig. 24 (4)*

14.8 Aligning the door

WARNING
Risk of injury due to the door dropping out!
If the bearing parts are not screwed into place firmly enough, the door may drop out. This may lead to severe injuries. What is more, the door may not close and therefore the appliance may fail to cool properly.
▶ Screw the turn hinges firmly into place with 4 Nm.
▶ Check all of the screws and retighten if necessary.

▶ Align the doors flush with the appliance housing using the two slots in the bearing bracket if needed. To do this undo the middle screw in the bottom bearing bracket with the T20 tool supplied. Undo the remaining screws a little with the T20 tool or with a T20 screwdriver and align using the slotted holes.
▶ Prop up the door: Take off the adjustable foot on the bearing bracket using the open-ended wrench SW10 until it comes into contact with the floor, then turn an additional 90°.

14.9 Fitting the soft stop mechanism

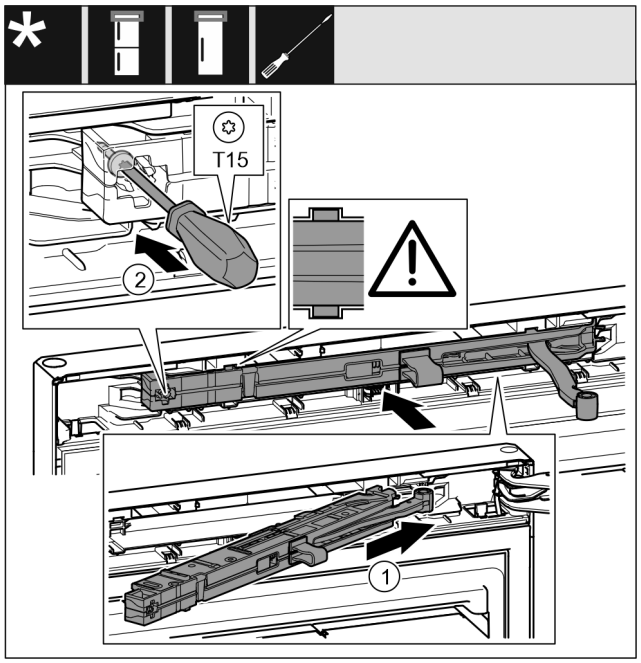

Fig. 25
▶ Slide the soft stop unit on the bearing bracket side at an angle into the slot as far as it will go. *Fig. 25 (1)*
▶ Slide the unit in completely.
▷ The unit is positioned correctly when the rib on the soft stop unit is in the guide in the housing.
▶ Tighten the screw with a T15 screwdriver. *Fig. 25 (2)*

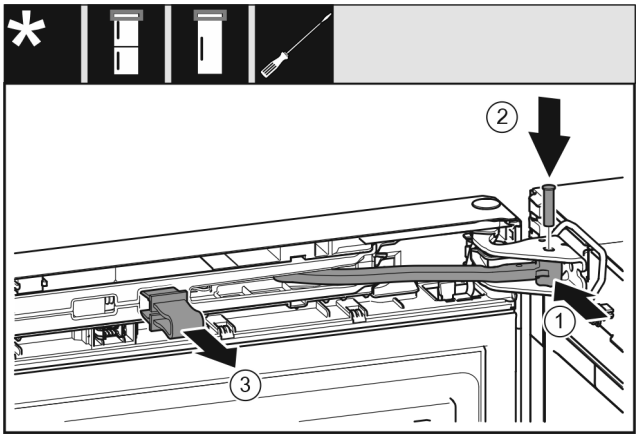

Fig. 26
The door is open 90°.
▶ Turn the hinge in the bearing bracket. *Fig. 26 (1)*
▶ Insert the bolt in the bearing bracket and hinge. Make sure that the latching lug sits correctly in the groove. *Fig. 26 (2)*
▶ Remove the locking device. *Fig. 26 (3)*

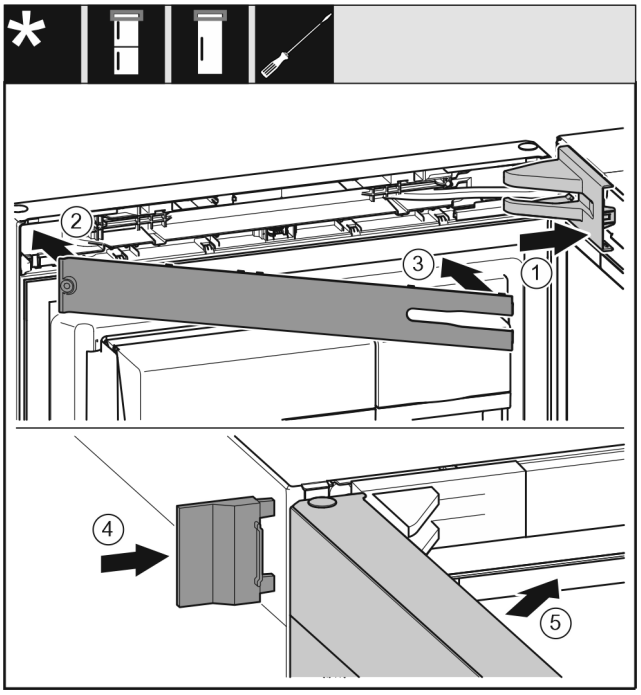

Fig. 27
▶ Position the bearing bracket cover and latch it in place. If necessary push it apart carefully. *Fig. 27 (1)*
▶ Position the panel. *Fig. 27 (2)*
▶ Swing in the panel and latch it into place. *Fig. 27 (3)*
▶ Slide on the outer cover. *Fig. 27 (4)*
▶ Close the upper door. *Fig. 27 (5)*

15 Water connection*

WARNING
Electricity in combination with water!
Electric shock.
▶ Before connecting to the water pipe: Disconnect the appliance from the mains.
▶ Before connecting to water supply lines: Shut off the water supply.
▶ The connection to the drinking water mains may only be carried out by a qualified gas and water engineer.

WARNING
Unclean water!
Contaminants.
▶ Only connect to the drinking water supply.

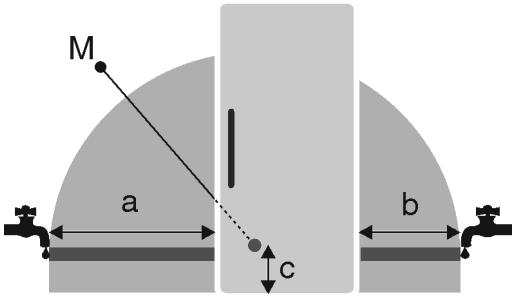

*Fig. 28 **

a	b	c	M*
~ 1150 mm	~ 1000 mm	~ 150 mm	Solenoid valve

The appliance's water connection and inlet solenoid valve are suitable for a water pressure of up to 1 MPa (10 bar).

Specifications for proper operation (flow rate, ice cube size, noise level):

Water pressure:	
bars	MPa
1.5 - 6.2	0.15 - 0.62

Water pressure when using the water filter:	
bars	MPa
2.8 - 6.2	0.28 - 0.62

If the pressure exceeds 0.62 MPa (6.2 bar): Activate the pressude reducer first.

Ensure that the following conditions are met:

❑ Water pressure is maintained.
❑ Water is supplied to the appliance via a cold water pipe which can withstand the operating pressure and is connected to the drinking water supply.
❑ Enclosed hose is used. Old hoses are disposed of.*
❑ A filter with a seal is located in the hose connector.*
❑ A stopcock must be provided between the hose line and the domestic water connection to cut off the water supply if necessary.*
❑ The stopcock must be located outside the back of the appliance and within easy reach so that the appliance can be placed as far back as possible and the stopcock can be turned off quickly. Distances are adhered to.
❑ All devices and equipment used to supply water must comply with the regulations in force in the respective country.
❑ The rear of appliance is accessible so that you can connect the appliance to the drinking water supply.
❑ Do not damage or kink the hose during installation.

Note
Different sized hoses are available as optional accessories.*

16 Connecting the water supply*

Connecting the hose to the appliance

The solenoid valve is at the bottom on the back of the appliance. It has a R3/4 connecting thread.
▶ Remove the cover *(2)*.
▶ Easy to fit: Place the straight end of the hose *(7)* to the left on the floor.
▶ Slide the nut *(4)* over the angled end of the hose *(3)* up to the end and secure.

NOTICE
Damaged solenoid thread pitch.
The solenoid leaks: Water may leak out.
▶ Locate the nut *Fig. 29 (1)* carefully and screw onto the thread.

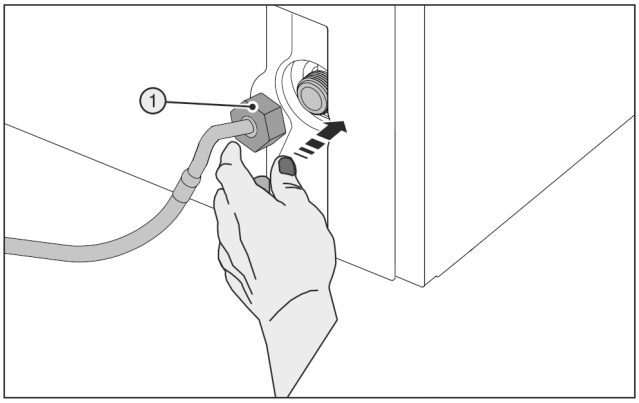

Fig. 29
▶ Position the nut *Fig. 29 (1)* carefully and screw it directly onto the thread with two fingers until it is seated securely.

WARNING
Broken auxiliary tool *(5)*.
Cuts.
▶ Only use an auxiliary tool *(5)* at room temperature.

▶ Tighten the nut *Fig. 29 (1)*clockwise with the auxiliary tool *(5)* until maximum torque is reached and the auxiliary tool *(5)* overtightens.

Connecting the hose to the stopcock
▶ Screw the nut *(7)* onto the stopcock *(8)*.

WARNING
Broken auxiliary tool *(5)*.
Cuts.
▶ Only use an auxiliary tool *(5)* at room temperature.

▶ Tighten the nut *(7)*clockwise with the auxiliary tool *(5)* until maximum torque is reached and the auxiliary tool *(5)* overtightens.
▶ Hook the clip *(6)* into the auxiliary tool *(5)* and fix it to the stainless steel pipe to store it.

Check the water system
▶ Slowly open the stopcock *(8)*.
▶ Check the entire water system for tightness.
▶ Clean the IceMaker (see User Guide, Maintenance).

Air the water system

Airing is required in the following cases:
- Initial operation
- Replacing the InfinitySpring water tank

Ensure that the following conditions are met:
- Appliance is properly connected
- Water tank is inserted (see User Guide, Maintenance)
- Water filter is in place (see the User Guide, Maintenance)
- Appliance is on

▶ Opening the appliance door
▶ Press your drinking glass or cup against the lower part of the InfinitySpring dispenser.
▷ The top part moves out and air or water pours into the glass.
▶ Continue until the water flows evenly into the glass.
▷ There is no more air in the system.
▶ InfinitySpring Cleaning (see the User Guide, Maintenance).

17 Connecting device

WARNING
Failure to connect properly
Fire hazard.
▶ Do not use an extension cable.
▶ Do not use distributor blocks.

NOTICE
Failure to connect properly
Damage to the electronics.
▶ Do not connect the appliance to a stand-alone inverter, e.g. solar power systems and petrol generators.
▶ Do not use an energy saving plug.

Note
Only use the supplied mains cable.
▶ A longer mains cable can be ordered from Customer Service.

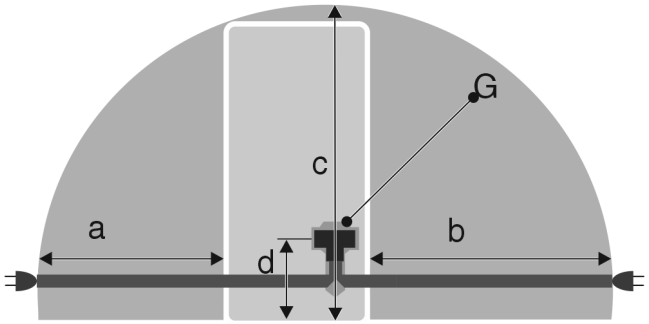

*Fig. 30 **

a*	b*	c*	d*	G*
~ 1350 mm	~ 1800 mm	~ 2050 mm	~ 150 mm	Appliance plug

Ensure that the following conditions are met:
- The type of current and voltage at the installation site match the information on the serial tag .
- The socket is earthed according to the regulations and fused.
- The fuse tripping current is between 10 and 16 A.
- The socket is easily accessible.
- The socket is not located behind the appliance but in areas a or b *(a, b, c)*.

▶ Check the electrical connection.
▶ Insert the appliance plug *(G)* into the back of the appliance. Ensure that they latch into place.
▶ Connect the mains plug to the power supply.
▷ The Liebherr logo appears on the screen.
▷ The display switches to the standby symbol.



home.liebherr.com/fridge-manuals

EN fridge with BioFresh

Issue date: 20220727

Part number index: 7080530-01

Liebherr-Hausgeräte Marica EOOD
Bezirk Plovdiv
4202 Radinovo
Bulgarien