SFP28 LR Transceiver



SFP28 LR Transceiver

Lanview's single-mode transceiver is SFP28 module for duplex optical data communications support up to 25.78Gb/s . It is with the SFP+ 20-pin connector to allow hot plug capability . Digital diagnostic functions are available via an I C . It has built-in clock and data recovery (CDR. This module is designed for single-mode fiber and operates at a nominal wavelength of 1310nm.

2

Product Features

- ✓ Duplex LC connector
- ✓ Hot-pluggable SFP28 footprint
- ✓ Operating data rate up to 25.78Gbps
- ✓ Uncooled 1310nm DFB laser
- ✓ RoHS compliant and Lead Free
- ✓ Distance up to 10km on 9/125um SMF
- ✓ Metal enclosure for lower EMI
- ✓ Power dissipation <1.2W(0~+70℃), <1.5W(-40~+85℃)
- ✓ Commercial / Industrial operating temperature optional

Applications

- ✓ 10G&25GBASE Ethernet
- ✓ eCPRI & CPRI



Regulatory Compliance

- ESD to the Electrical PINs: compatible with MIL-STD-883 Method 3015
- ESD to the Duplex LC Receptacle: compatible with EN 61000-4-2
- Immunity compatible with EN 61000-4-3
- EMI compatible with FCC Part 15 Class B
- Laser Eye Safety compatible with FDA 21CFR 1040.10 and 1040.11 IEC 60950, IEC60825-1,2
- RoHS compliant with RoHS 2.0(2015/863/EU)-amending.

Pin Descriptions

Pin	Symbol	Name	Ref.
1	VeeT	Transmitter Ground (Common with Receiver Ground)	1
2	TX Fault	Transmitter Fault. LVTTL-O	2
3	TX Disable	Transmitter Disable. Laser output disabled on high or open. LVTTL-I	3
4	SDA	2-Wire Serial Interface Data Line (Same as MOD-DEF2 in INF-8074i). LVTTL-I/O	2
5	SCL	2-Wire Serial Interface Data Line (Same as MOD-DEF2 in INF-8074i). LVTTL-I	2
6	Mod_ ABS	Module Absent, Connect to VeeT or VeeR in Module.	2
7	RS0	Rate Select 0, optionally controls SFP+ module receiver . LVTTL-I	4
8	LOS	Loss of Signal indication. Logic 0 indicates normal operation. LVTTL-O	5
9	RS1	Rate Select 1, optionally controls SFP+ module transmitter. LVTTL-I	4
10	VeeR	Receiver Ground (Common with Transmitter Ground)	1
11	VeeR	Receiver Ground (Common with Transmitter Ground)	1
12	RD-	Receiver Inverted DATA out. AC Coupled. CML-O	
13	RD+	Receiver Non-inverted DATA out. AC Coupled. CML-O	
14	VeeR	Receiver Ground (Common with Transmitter Ground)	1
15	VccR	Receiver Power Supply	6
16	VccT	Transmitter Power Supply	6
17	VeeT	Transmitter Ground (Common with Receiver Ground)	1
18	TD+	Transmitter Non-Inverted DATA in. AC Coupled. CML- I	
19	TD-	Transmitter Inverted DATA in. AC Coupled. CML- I	
20	VeeT	Transmitter Ground (Common with Receiver Ground)	1

Note

1. Circuit ground is internally isolated from chassis ground.
2. TX Fault is an open collector/drain output .Which should be pulled up with a 4.7K – 10K Ohms resistor on the host board if intended for use. Pull up voltage should be between 2.0V to Vcc+0.3V.A high output indicates a transmitter fault caused by either the tx bias current or the tx output power exceeding the preset alarm thresholds. A low output indicates normal operation .In the low state, the output is pulled to <0.8V.
3. Laser output disabled on TX Disable >2.0V or open, enabled on TX Disable<0.8V.
4. Internally pulled down per SFF-8431 Rev4.1.
5. LOS is open collector output. Should be pulled up with 4.7k – 10kohms on host board to a voltage between 2.0V and 3.6V. Logic 0 indicates normal operation; logic 1 indicates loss of signal.
6. Internally connected.

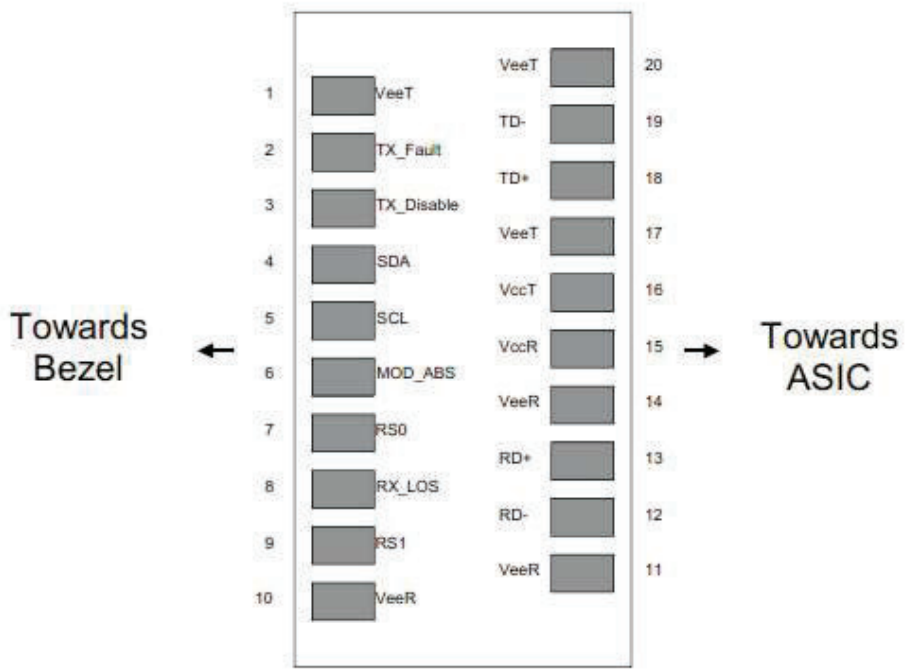

Pin-out of Connector Block on Host Board

Recommend Circuit Schematic

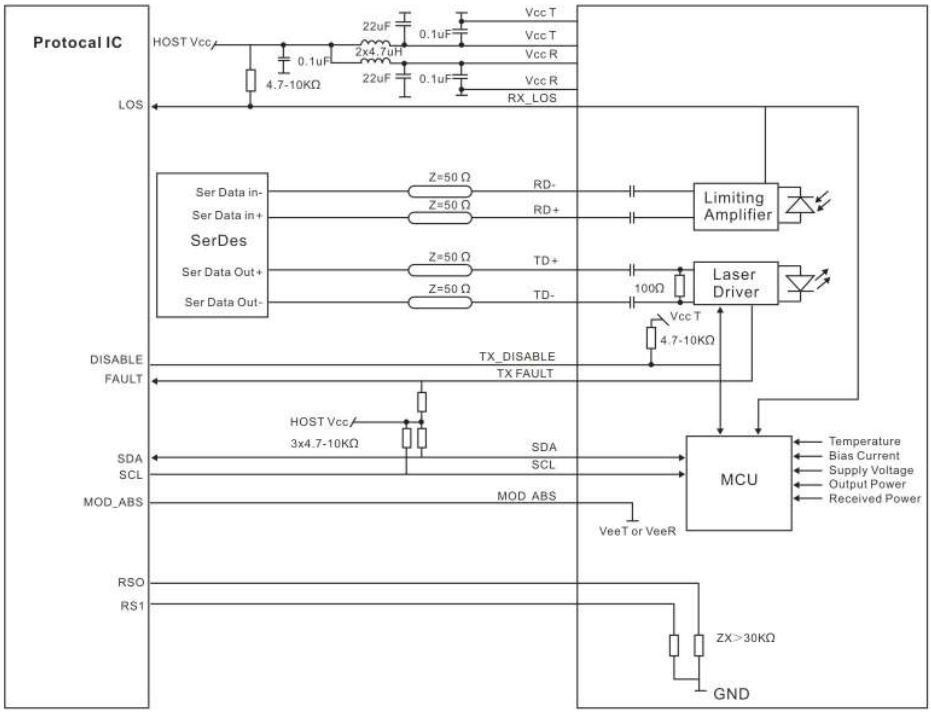

Absolute Maximum Ratings

Parameter	Symbol	Min	Typ	Max	Unit	Ref.
Maximum Supply Voltage	Vcc	-0.5		+4.0	V	
Storage Temperature	TS	-40		+85	℃	
Operating Humidity	RH	0		85	%	

Recommended Operating Conditions

Parameter	Symbol	Min	Typ	Max	Unit	Ref.
Power Supply Voltage	Vcc	3.13	3.30	3.47	V	
Power Supply Current	Icc			360	mA	Commercial
				450	mA	Industrial
Case Operating Temperature	TC	0		+70	°C	Commercial
		-40		+85	°C	Industrial
Data Rate	BR		25.78		Gbps	
9/125um G.652 SMF	Lmax			10	km	

Electrical Characteristics

Parameter	Symbol	Min	Typ	Max	Unit	Ref.
Transmitter						
Input differential impedance	Rin	90	100	110	Ω	1
Differential data input swing	Vin, pp	120		850	mV	
TX Disable-High		Vcc – 1.3		Vcc+ 0.3	V	
TX Disable-Low		Vee		Vee+ 0.8	V	
TX Fault-High		Vcc-1.3		Vcc+ 0.3	V	
TX Fault-Low		Vee		Vee+0.8	V	
Receiver						
Differential Data Input Swing	Vout, pp	300		850	mV	2
LOS-High		Vcc-0.9		Vcc+0.3	V	
LOS-Low		Vee		Vee+0.4	V	

Notes:

1. AC coupled.
2. Into 100 ohm differential termination.

Optical Characteristics

Parameter	Symbol	Min	Typ	Max	Unit	Ref.
Transmitter						
Output Opt. Power	PO	-7		+2	dBm	
Optical Wavelength	λ	1295	1310	1325	nm	
Side-Mode Suppression Ratio	SMSR	30			nm	
Spectral Width(-20dB)	Δλ			1	dB	
Optical Extinction Ratio	ER	3.5				
Receiver						
RX Sensitivity @25.78Gb/s	SEN			-13.5	dBm	1
RX Sensitivity OMA@25.78Gb/s	SEN			-12.0	dBm	2
Receiver Overload		2			dBm	
Optical Center Wavelength	λC	1260		1610	nm	
LOS De-Assert	LOSD			-15	dBm	
LOS Assert	LOSA	-30			dBm	
LOS Hysteresi		0.5		6	dB	

Notes:
1. Measured with data rate at 25.78Gb/s, BER less than 5E-5 with PRBS 2^{31}-1. This value is informative and not the principal indicator of signal strength. A received power below this value cannot be compliant; however, a value above this does not ensure compliance.
2. Measured with data rate at 25.78Gb/s, BER less than 5E-5 with PRBS 2^{31}-1.

Mechanical Specifications

• Lanview's Small Form Factor Pluggable (SFP28) transceivers are compatible with the dimensions defined by the SFP Multi-Sourcing Agreement (MSA) , dimensions are in mm.

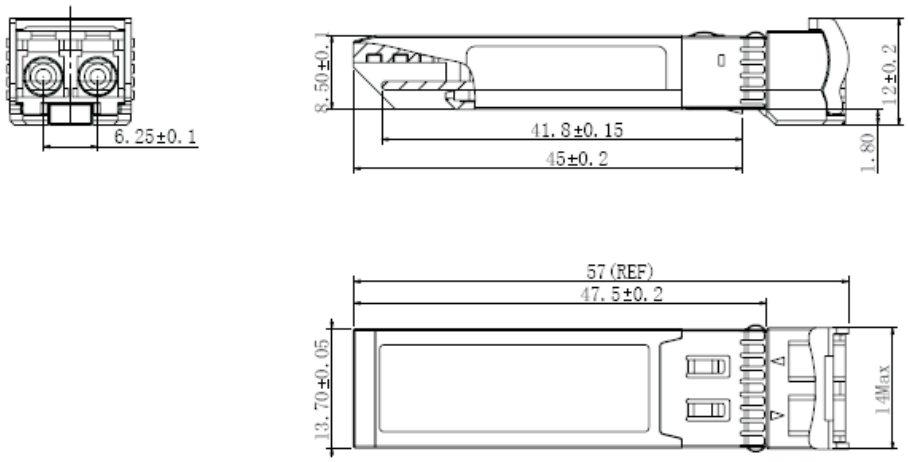

EEPROM Information

• EEPROM memory map specific data field description is as below:

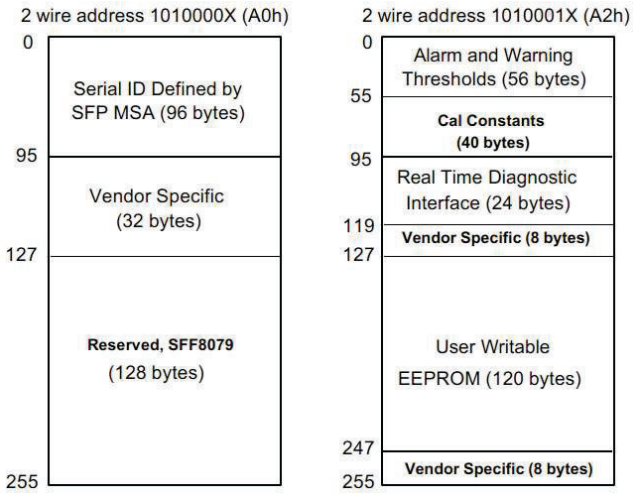

Digital Diagnostic Monitoring Interface

Five transceiver parameter values are monitored. The following table defines the monitored parameter's accuracy.

Parameter	Range	Accuracy	Calibration
Temperature	0 to +70°C (C) -40 to +85°C (I)	±3°C	Internal
Voltage	3.13 to 3.47V	±3%	Internal
Bias Current	0 to 100mA	±10%	Internal
TX Power	-7 to +2dBm	±3dB	Internal
RX Power	-15 to +2dBm	±3dB	Internal