AKP 447/IX/01

12NC: 857744701530

GTIN (EAN) code: 8003437938092

SENSING THE DIFFERENCE



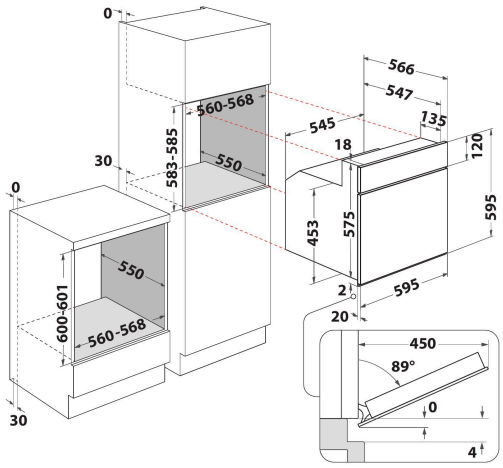

Whirlpool built in electric oven: inox color - AKP 447/ IX/01

This Whirlpool built in Oven features: advanced electric technology allowing you to cook dishes saving energy. Halogen lamp allowing a more energy-efficient performance.

Multifunction 5
Multiple cooking methods. The Multifunction 5 feature offers flexible cooking options, to ensure perfect results, whatever the recipe.

Sliding shelves
Smooth motion. This Whirlpool oven features soft-sliding shelves, for increased ease of use.

Catalytic
Self-cleaning panels. The catalytic panels fitted inside the oven take care of any spills and splashes, eliminating them while cooking.

Standard cavity
This Whirlpool Oven features a standard-size cavity.

Energy class
Outstanding energy savings. Ovens with an A/ A+ energy rating offer an excellent level of energy efficiency, ensuring lower consumption and saving you money on your energy bills.

Energy class A
Energy efficient. With its A energy rating, this Whirlpool appliance will allow you to enjoy both ideal performance and excellent energy consumption.

- Catalytic cleaning system
- Energy class A
- Cavity 65 L
- Defrost function
- Grill
- Easy Clean Enamel Interior
- Turbo grill function
- Pastry function
- Conventional Cooking
- Metal handle
- Door Glasses Number: 2
- Protuding handle
- Timer
- Grill 1400 W
- 2 Grids
- 1 Tray
- Motorized Turn Spit

AKP 447/IX/01

12NC: 857744701530

GTIN (EAN) code: 8003437938092

Whirlpool
SENSING THE DIFFERENCE

MAIN FEATURES

Product group	Oven
Commercial code	AKP 447/IX/01
Main colour of product	Inox
Construction type	Built-in
Type of control	Mechanical and electronic
Type of control settings	-
Are any hobs controls integrated?	No
Which kind of hobs can be controlled?	-
Automatic programmes	Yes
Current (A)	13
Voltage (V)	220-240
Frequency (Hz)	50/60
Length of Electrical Supply Cord (cm)	90
Plug type	No
Depth with open door 90 degree (mm)	-
Height of the product	595
Width of the product	595
Depth of the product	564
Minimum niche height	0
Minimum niche width	0
Niche depth	0
Net weight (kg)	34
Usable volume (of cavity)	65
Integrated Cleaning system	Catalytic partial
Grids of the cavity	2
Trays	1

TECHNICAL FEATURES

Timer	-
Time control	Electronic
Time-setting options	Start and Stop
Safety device	-
Interior light	Yes
Number of interior lights of the cavity	1
Position of interior lights of the cavity	Rear
Oven guides of the cavity	Telescopic
Probe of the cavity	No

PERFORMANCES

Energy input	Electric
Type of energy of the cavity	Electricity
Energy efficiency class - NEW (2010/30/EU)	A
Energy consumption per cycle conventional - NEW (2010/30/EU)	0.87
Energy consumption per cycle forced air convection - NEW (2010/30/EU)	0.78

