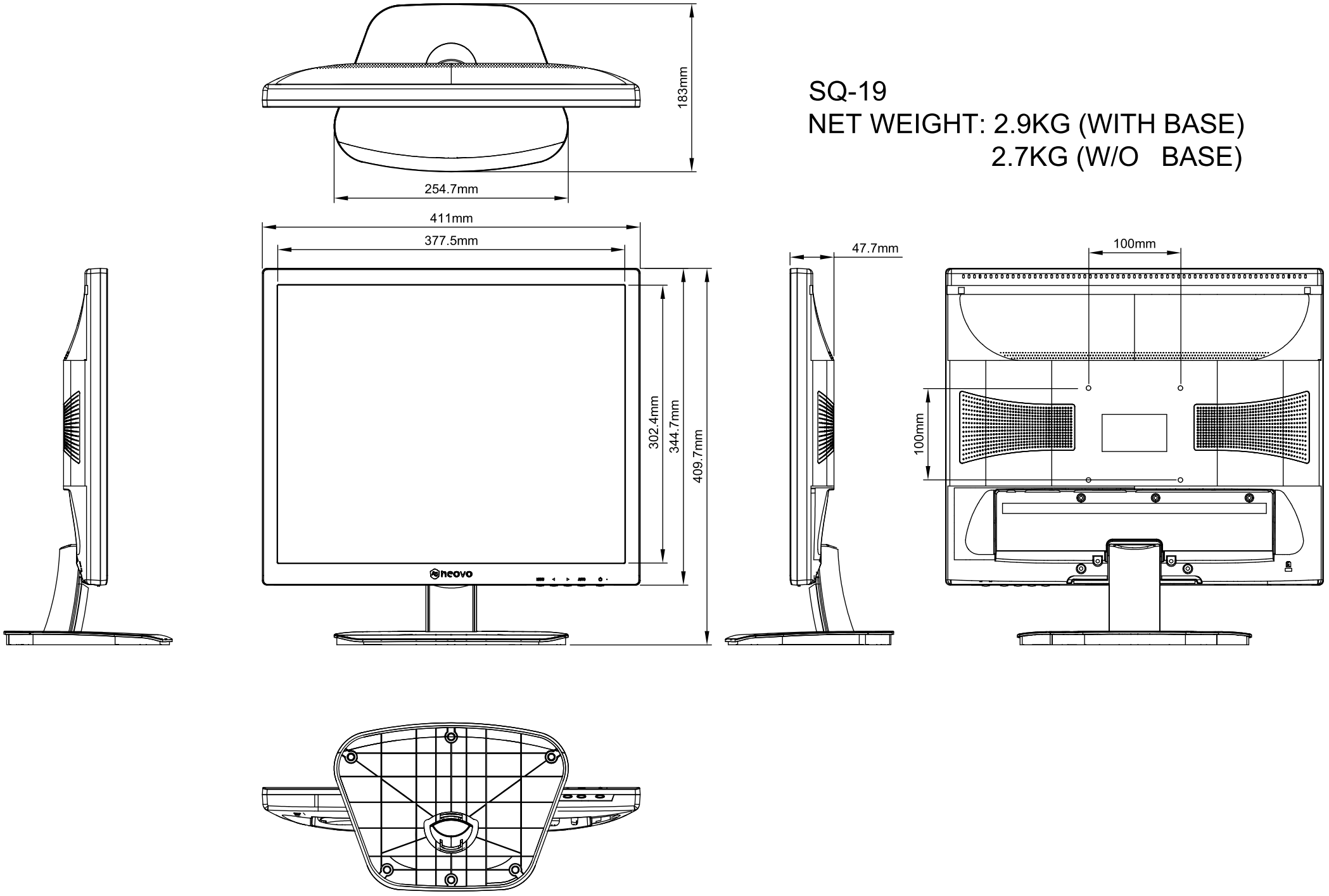

SQ-19

NET WEIGHT: 2.9KG (WITH BASE)

2.7KG (W/O BASE)