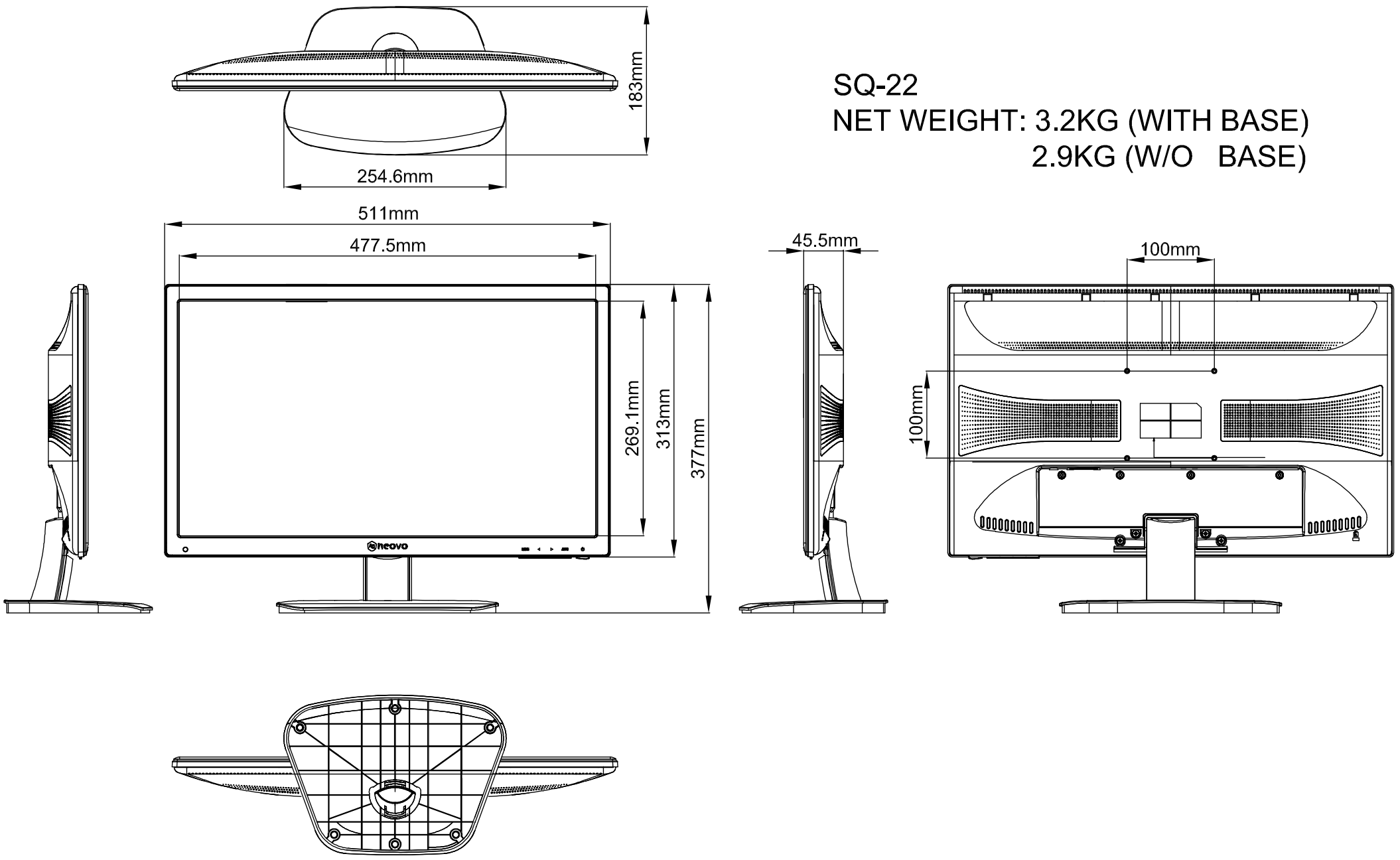

SQ-22

NET WEIGHT: 3.2KG (WITH BASE)

2.9KG (W/O BASE)