Operating instructions

Combined fridge-freezer

EN

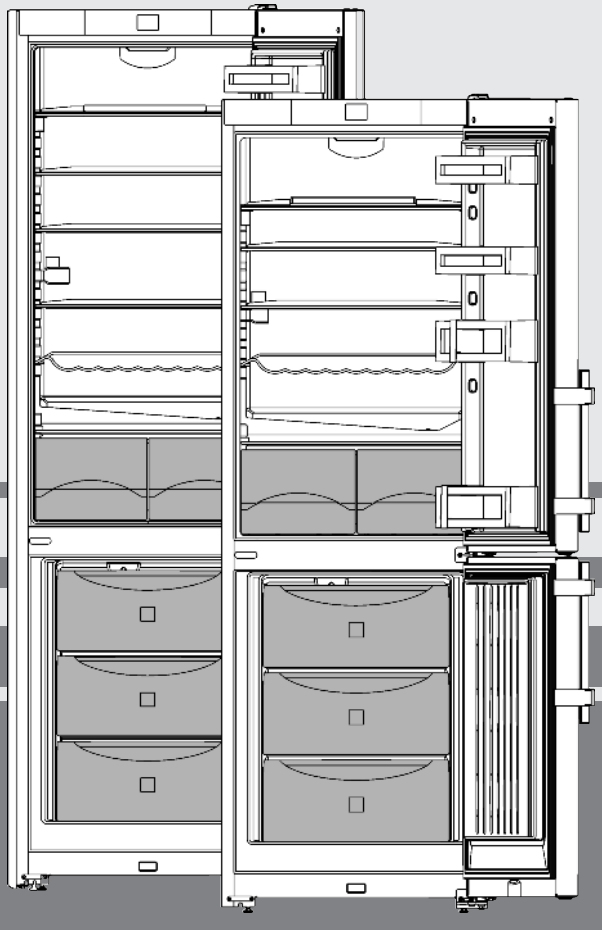

130116 **7082868 - 00**

CU(ef)(sl)29/35/40 ...

LIEBHERR

Contents

1	**Appliance at a glance**	**2**
1.1	Overview of the appliance and equipment	2
1.2	Appliance range of use	2
1.3	Conformity	3
1.4	External dimensions of the appliance	3
1.5	Saving energy	3
1.6	Smart device	4
2	**General safety information**	**4**
3	**Controls and displays**	**5**
3.1	Home screen	5
3.2	Operating structure	5
3.3	Navigation	5
3.4	Display symbols	6
3.5	Appliance options	6
4	**Putting into operation**	**6**
4.1	Transporting the appliance	6
4.2	Installing the appliance	6
4.3	Changing over the door hinges	7
4.4	Insertion into a row of kitchen units	8
4.5	Disposing of packaging	9
4.6	Connecting the appliance	9
4.7	Switching on the appliance	9
5	**Control**	**9**
5.1	Changing the temperature unit	9
5.2	Child proofing	10
5.3	Sabbath Mode	10
5.4	Refrigerator compartment	10
5.5	Freezer compartment	11
6	**Maintenance**	**12**
6.1	Manual defrosting	12
6.2	Cleaning the appliance	13
6.3	Customer service	13
7	**Malfunctions**	**14**
8	**Messages**	**15**
9	**Decommissioning**	**15**
9.1	Switching the appliance off	15
9.2	Taking the appliance out of service	15
10	**Disposing of the appliance**	**16**

The manufacturer works constantly on the further development of all the types and models. Therefore please understand that we have to reserve the right to make design, equipment and technical modifications.

To get to know all the benefits of your new appliance, please read the information contained in these instructions carefully.

The instructions apply to several models. Differences may occur. Text relating only to specific appliances is marked with an asterisk (*).

Instructions for action are marked with a ▶, the results of action are marked with a ▷.

1 Appliance at a glance

1.1 Overview of the appliance and equipment

Note

▶ Place food inside the appliance as shown in the diagram. This allows the appliance to save energy during operation.

▶ Shelves, drawers and baskets are arranged for optimum energy efficiency on delivery.

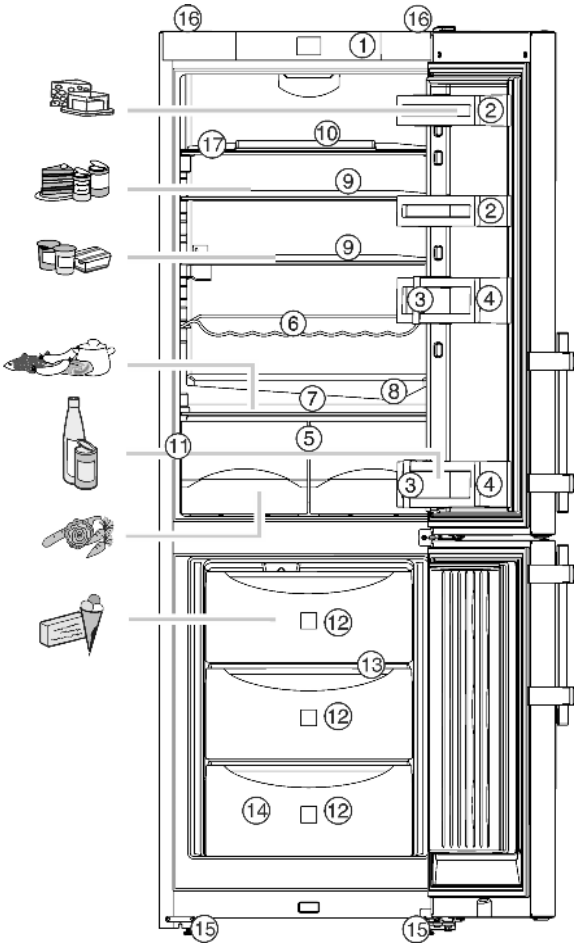

Fig. 1

(1) Operating controls
(2) Door rack, adjustable
(3) Bottle holder, moveable
(4) Bottle shelf
(5) Vegetable bins
(6) Bottle rack
(7) Coldest area
(8) Drain opening
(9) Shelf, adjustable
(10) Egg tray
(11) Type plate
(12) Freezer drawer
(13) VarioSpace
(14) Ice cube tray
(15) Adjustable feet at the front, transport rollers at the rear
(16) Transport handles
(17) Shelf, separable

1.2 Appliance range of use

Intended use

The appliance is only suitable for refrigerating food in a domestic or domestic-like environment. This includes, for example, using

- in staff kitchens, bed and breakfast establishments,
- by guests in country houses, hotels, motels and other accommodation,
- for catering and similar services in the wholesale trade.

All other types of use are not permitted.

Foreseeable misuse

The following applications are expressly forbidden:

- Storing and refrigerating medicines, blood plasma, laboratory preparations or similar

substances and products based on the Medical Device Directive 2007/47/EC
- Use in areas at risk of explosions
- Use on moving substrates, such as ships, rail travel or aeroplanes
- Storing live animals

Misusing the appliance may lead to damage to the goods stored or they may spoil.

Climate classifications

Depending on the climate classification the appliance is designed to operate in restricted ambient temperatures. The climate classification applying to your appliance is printed on the rating plate.

Note

▶ Keep to the specified ambient temperatures in order to guarantee that the appliance works properly.

Climate classification	for ambient temperatures of
SN	10 °C to 32 °C
N	16 °C to 32 °C
ST	16 °C to 38 °C
T	16 °C to 43 °C

1.3 Conformity

The refrigerant circuit is tested for leakage. The appliance complies with the relevant safety regulations and EC Directives 2006/95/EC, 2004/108/EC, 2009/125/EC and 2010/30/EU.

Note for test institutions:

Tests are to be carried out according to the applicable standards and guidelines.
Preparation and testing of the appliances must be carried out taking the **manufacturer's loading plans** and the **notes in the operating manual** into account.

1.4 External dimensions of the appliance

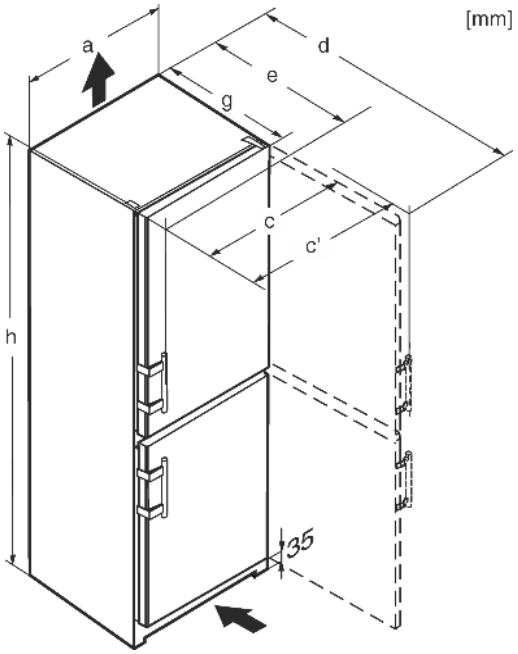

Fig. 2

	h	a	g	e	d	c	c'
CU(sl)(ef)2915	1623	600	625[x]	665[x]	1172[x]	600	644
CU(ef)3515	1817	600	625[x]	665[x]	1172[x]	600	644
CU(sl)(ef)4015	2011	600	625[x]	665[x]	1172[x]	600	644

[x] For appliances supplied with wall spacers, the measurement increases by 35 mm (see 4.2) .

1.5 Saving energy

- Pay attention to good ventilation. Do not cover ventilation holes or grids.
- Do not install the appliance in direct sunlight, next to an oven, radiator or similar.
- Energy consumption depends on the installation conditions, e.g. the ambient temperature (see 1.2) .
- Open the appliance for as short a time as possible.
- The lower the temperature is set the higher the energy consumption.
- Sort food before arranging (see Appliance at a glance).
- Store all food well packaged and covered. A build up of frost is avoided.
- Only take food out for as long as necessary so that it doesn't warm up too much.
- Inserting hot food: let it cool to room temperature first.
- Thaw frozen food in the refrigerator.
- If there is a thick layer of frost in the appliance: defrost the appliance.
- If you intend to be on holiday for a long time empty the refrigerator and switch it off.

Dust deposits increase energy consumption:

- For refrigerators with heat exchangers dust the metal grid on the back of the appliance once a year.

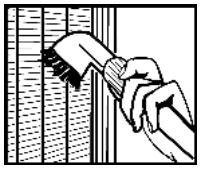

1.6 Smart device

The appliance is ready for integration into a smart home and for extended services. Other options can be selected with a SmartDeviceBox. This is activated via the MyLiebherr customer portal.



You will find more information about availability and pre-requisites and the individual options on the website www.smartdevice.liebherr.com.

2 General safety information

Danger for the user:

- This appliance can be used by children of 8 years old and over, and also by persons with restricted physical, sensory or mental capacity or lack of experience and knowledge, if they are supervised or have been instructed on safe use of the appliance and understand the resulting risks. Children must not be allowed to play with the appliance. Cleaning and user maintenance must not be carried out by children without supervision.
- When disconnecting the appliance from the supply, always take hold of the plug. Do not pull the cable.
- In the event of a fault pull out the mains plug or deactivate the fuse.
- Do not damage the mains power cable. Do not operate the appliance with a defective mains power cable.
- Have any repairs to or intervention in the appliance, and any change of the mains power cable, carried out by the customer service only or by other specialised personnel trained for the purpose.
- Only assemble, connect and dispose of the appliance according to the instructions.
- Please keep these instructions in a safe place and pass them on to any subsequent owners.
- Special-purpose lamps (incandescent lamps, LEDs, fluorescent tubes) in the appliance serve to illuminate the appliance interior and are not suited for room illumination.

Fire hazard:

- The refrigerant R 600a is environmentally friendly but flammable. Escaping refrigerant may ignite.
  - Do not damage the refrigerant circuit pipes.
  - Do not allow naked flames or ignition sources to enter the appliance.
  - Do not use any electrical appliances in the interior (e.g. steam cleaners, heaters, ice cream maker etc.).
  - If refrigerant escapes: remove any naked flames or sources of ignition from the leakage area. Ventilate the room well. Notify the after-sales service.
- Do not store explosives or sprays using combustible propellants such as butane, propane, pentane, etc. in the appliance. To identify these spray cans, look for the list of contents printed on the can, or a flame symbol. Gases possibly escaping may ignite due to electrical components.
- Keep burning candles, lamps and other items with naked flames away from the appliance so that they do not set the appliance on fire.
- Please be sure to store alcoholic drinks or other packaging containing alcohol in tightly closed containers. Any alcohol that leaks out may be ignited by electrical components.

Danger of tipping and falling:

- Do not misuse the plinth, drawers, doors etc. as a step or for support. This applies particularly to children.

Danger of food poisoning:

- Do not consume food which has been stored too long.

Danger of frostbite, numbness and pain:

- Avoid lasting skin contact with cold surfaces or refrigerated/frozen food or take protective steps, e.g. wear gloves. Do not consume ice cream, water ice or ice cubes immediately and do not consume them too cold.

Danger of injury and damage:

- Hot steam can lead to injury. Do not use electrical heating or steam cleaning equipment, open flames or defrosting sprays to defrost.
- Do not use sharp implements to remove the ice.

Danger of crushing:

- Do not hold the hinge when opening and closing the door. Fingers may get caught.

Symbols on the appliance:

	The symbol can be located on the compressor. It refers to the oil in the compressor and indicates the following danger: Swallowing or inhaling can be fatal. This is only relevant for recycling. There is no danger in normal operation.

Please observe the specific information in the other sections:

	DANGER	identifies a situation involving direct danger which, if not obviated, may result in death or severe bodily injury.

⚠	WARNING	identifies a dangerous situation which, if not obviated, may result in death or severe bodily injury.
⚠	CAUTION	identifies a dangerous situation which, if not obviated, may result in minor or medium bodily injury.
	NOTICE	identifies a dangerous situation which, if not obviated, may result in damage to property.

	Note	identifies useful information and tips.

3 Controls and displays

3.1 Home screen

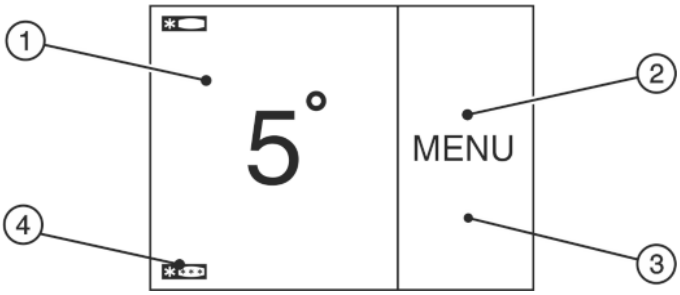

Fig. 3

(1) Fridge compartment field
(2) Menu field
(3) Screen
(4) Symbol, freezer section

The home screen is the first screen the user sees. All settings can be made from there.

All functions can be called up by touching the screen and values can be changed.

3.2 Operating structure

Fridge compartment field

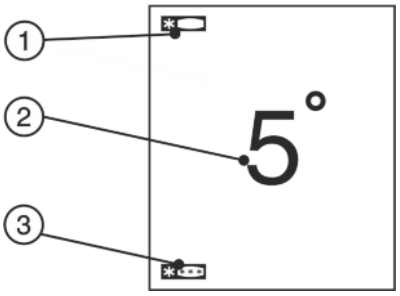

Fig. 4

(1) Fridge compartment symbol
(2) Fridge compartment temperature display
(3) Symbol, freezer section

The fridge compartment temperature is displayed in the fridge compartment field.

The following settings can be entered:

- Temperature settings
- Switching the fridge compartment on and off

Menu field

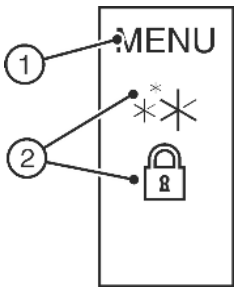

Fig. 5

(1) Main menu
(2) Option selected

The menu field gives access to the appliance options and settings. Selected options are also displayed.

3.3 Navigation

Touch the menu to access the individual options. An audible signal sounds after confirming an option or a setting. The display switches to the home screen.

The appliance is operated using the following symbols:



Standby:

Switches the appliance or temperature zone on.



Menu:

Calls up options.



Minus / Plus:

Changing settings (e.g. adjusting temperatures).



Left/right navigation arrow:

Selects options and navigates through the menu.

You can scroll through the individual options using the navigation arrows. The first option is displayed again after the last one.

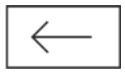

Back:

Cancels the selection.

The display switches to the next higher level or to the home screen

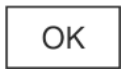

OK:

Confirms the selection.

After confirmation the display switches to the home screen.



ON / OFF, START / STOP

Starts/ stops options.

After selecting or cancelling an option the display switches to the home screen.



RESET:

Resets timer.



Access to customer service

Note

If no selection is made after 1 minute the display switches to the home screen.

3.4 Display symbols

Display symbols provide information on the current appliance status:



Up arrows:

The temperature increases.



Down arrows:

The temperature reduces.



Standby:

The appliance or temperature zone is switched off.



Messages:

There are active error messages and reminders.

3.5 Appliance options

You can select or set the following options; explanations and setting options, (see Control):

Symbol	Option
	SuperFrost[x]
	SabbathMode
	Child safety device[x]
	Temperature unit

[x] If the option is selected, the relevant symbol is displayed in the menu field.

The symbol disappears if the option ends or is disabled.

4 Putting into operation

4.1 Transporting the appliance

CAUTION

Risk of injury and danger of damage as a result of incorrect transport!

- ▶ Transport the appliance in a packed condition.
- ▶ Transport the appliance upright.
- ▶ Do not transport the appliance without assistance.

4.2 Installing the appliance

WARNING

Fire hazard due to dampness!

If live parts or the mains lead become damp this may cause short circuits.

- ▶ The appliance is designed for use in enclosed areas. Do not operate the appliance outdoors or in areas where it is exposed to splash water or damp conditions.

WARNING

Risk of fire due to short circuit!

If the mains cable/connector of the appliance or of another appliance touch the rear of the appliance, the mains cable/connector may be damaged by the appliance vibrations, leading to a short circuit.

- ▶ Stand the appliance so that it is not touched by connectors or main cables.
- ▶ Do not plug the appliance or any others into sockets located near the rear of the appliance.

WARNING

Fire hazard due to refrigerant!

The refrigerant R 600a is environmentally friendly but flammable. Escaping refrigerant may ignite.

- ▶ Do not damage the piping of the refrigeration circuit.

WARNING

Fire hazard and danger of damage!

- ▶ Do not place appliances emitting heat e.g. microwaves, toasters etc. on the appliance!

WARNING

Blocked ventilation openings pose a risk of fire and damage!

- ▶ Always keep the ventilation openings clear. Always ensure that the appliance is properly ventilated!

NOTICE

Risk of damage due to condensate!

- ▶ Do not install the appliance directly alongside a further refrigerator/freezer.

- ❑ In the event that the appliance is damaged, contact the supplier immediately before connecting to the mains.
- ❑ The floor at the site must be flat and level.
- ❑ Do not install the appliance in a location where it is exposed to direct radiation of the sun, next to a cooker, heater and similar.
- ❑ Always stand the appliance backed directly to the wall using the enclosed wall spacers (see below).
- ❑ The appliance may be moved only when it is empty.
- ❑ Do not install the appliance without assistance.
- ❑ The more R 600a refrigerant there is in the appliance, the larger the room in which the appliance is standing needs to be. In rooms that are too small, a flammable mix of gas and air may be created if there is a leak. According to the EN 378 standard, every 11 g of R 600a refrigerant requires at least 1 m^3 space in the room for the appliance. The amount of refrigerant in your appliance is on the type plate inside the appliance.

- ▶ Detach the connecting cable from the rear of the appliance, removing the cable holder at the same time because otherwise there will be vibratory noise!
- ▶ Remove the protective film from the outside of the appliance.*
- ▶ Remove the protective film from the decorative trims.
- ▶ Remove all transit supports.

The spacers supplied with some appliances must be used to achieve the stated energy consumption. These will extend the depth of the appliance by approx. 35 mm. The appliance is fully functional if the spacers are not used, but does have a slightly higher energy consumption.

*** Depending on model and options**

▶ In the case of an appliance with enclosed wall spacers, mount the wall spacers on the back of the appliance at the top left and right.

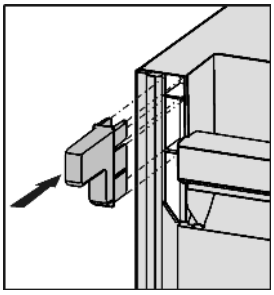

▶ Dispose of packaging material (see 4.5) .

▶ Align the appliance so that it stands firmly and on a level by applying the accompanying spanner to the adjustable-height feet (A) and using a spirit level.

▶ Then support the door: Extend the adjustable foot at the turn hinge (B) until it rests on the floor and then make a further 90° turn.

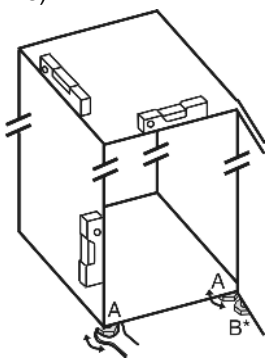

Note

▶ Clean the appliance (see 6.2) .

If the appliance is installed in a very damp environment, condensate may form on the outside of the appliance.

▶ Always see to good ventilation at the installation site.

4.3 Changing over the door hinges

You can change over the door hinges if necessary.

Ensure that the following tools are to hand:

- ❑ Torx® 25
- ❑ Torx® 15
- ❑ Screwdriver
- ❑ Cordless screwdriver, if necessary
- ❑ Second person for fitting work, if needed

4.3.1 Detaching the upper door

Note

▶ Remove any food from the door racks before removing the door, so that no food falls out.

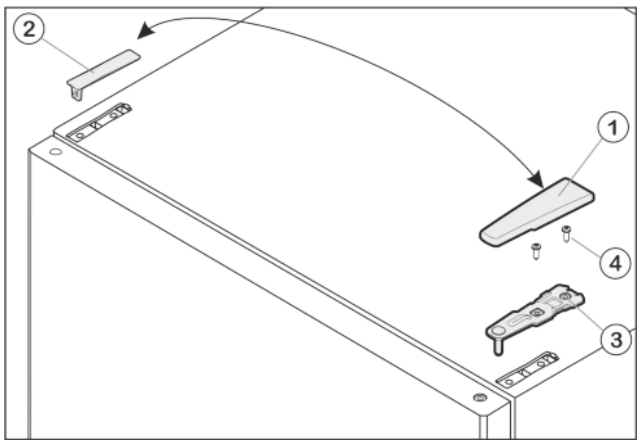

Fig. 6

▶ Close the upper door.

▶ Pull off the cover *Fig. 6 (1)* forwards and upwards.

▶ Lift off the cover *Fig. 6 (2)*.

CAUTION

Risk of injury if the door tips!

▶ Take good hold of the door.

▶ Set down the door carefully.

▶ Unscrew the upper turn hinge *Fig. 6 (3)*(2x Torx® 25) *Fig. 6 (4)* and lift it off.

▶ Lift up the upper door and set it aside.

4.3.2 Detaching the lower door

▶ Close the lower door.

▶ Draw the middle bearing pin *Fig. 7 (11)* out of the turn hinge and lower door.

▶ Remove the plastic cap *Fig. 7 (10)*.

CAUTION

Risk of injury if the door tips!

▶ Take good hold of the door.

▶ Set down the door carefully.

▶ Open the lower door.

▶ Unscrew the middle turn hinge (2x Torx® 25). *Fig. 7 (13)*

▶ Lift up the door and set it aside.

4.3.3 Transferring the middle bearing elements

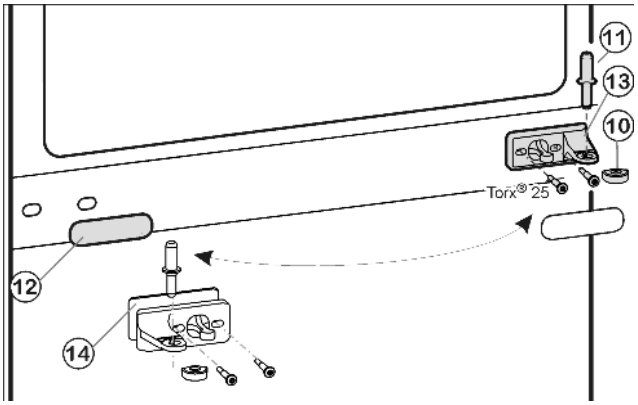

Fig. 7

▶ Carefully detach the cover panel *Fig. 7 (12)*.

▶ Turn the middle turn hinge *Fig. 7 (13)* with the washer *Fig. 7 (14)* through 180° and screw it firmly into place on the new hinge side **(with 4 Nm)**.

▶ Turn the cover panel *Fig. 7 (12)* through 180° and snap it into place again on the new handle side.

4.3.4 Transferring the lower bearing elements

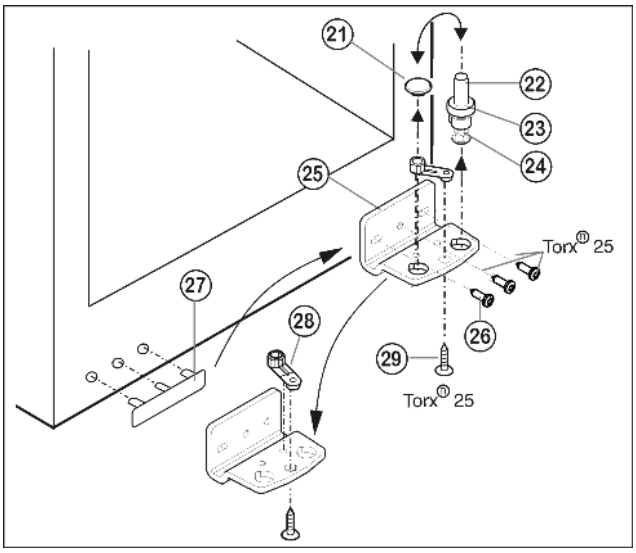

Fig. 8

- ▶ Lift out the bearing pin *Fig. 8 (22)* together with washer *Fig. 8 (23)* and foot *Fig. 8 (24)*.
- ▶ Lift off the stopper *Fig. 8 (21)*.
- ▶ Unscrew *Fig. 8 (26)* the turn hinge *Fig. 8 (25)*.
- ▶ Unscrew *Fig. 8 (29)* the bearing element *Fig. 8 (28)*, transfer it to the opposite location hole of the turn hinge and screw it firmly into place.
- ▶ Carefully lift off the cover on the handle side *Fig. 8 (27)* and transfer it to the opposite side.
- ▶ Screw the turn hinge *Fig. 8 (25)* firmly into place on the new hinge side, possibly using a cordless screwdriver **(with 4 Nm)**.
- ▶ Re-insert the stopper *Fig. 8 (21)* into the other hole.
- ▶ Re-insert the bearing pin *Fig. 8 (22)* together with washer and foot. In so doing, pay attention that the locating lug points backwards

4.3.5 Transferring the handles

On both the upper and lower door:

- ▶ Transfer the spring clamp *Fig. 9 (31)*: Depress the latch nose and pull the spring clamp off over it.
- ▶ Slide the spring clamp into place on the new hinge side until it clicks into place.

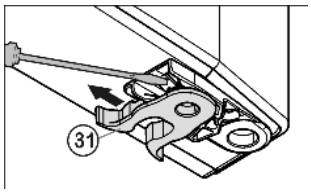

Fig. 9

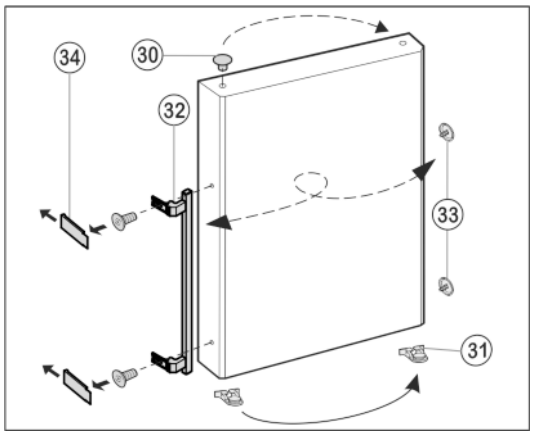

Fig. 10

- ▶ Lift the stopper *Fig. 10 (30)* out of the door bearing bush and transfer it.
- ▶ Detach door handle *Fig. 10 (32)*, stopper *Fig. 10 (33)* and pressure plates *Fig. 10 (34)* and transfer to the opposite side.
- ▶ When fitting the pressure plates on the opposite side, make sure they snap properly into place*

4.3.6 Fitting the lower door

- ▶ Place the lower door from above onto the lower bearing pin *Fig. 8 (22)*.
- ▶ Close the door.
- ▶ Place the plastic cap *Fig. 7 (10)* back onto the middle turn hinge *Fig. 7 (13)*.
- ▶ Place the middle bearing pin *Fig. 7 (11)* in the lower door, on the new hinge side, through the middle turn hinge *Fig. 7 (13)*.

4.3.7 Fitting the upper door

- ▶ Place the upper door on the middle bearing pin *Fig. 7 (11)*.
- ▶ Insert the upper turn hinge *Fig. 6 (3)* in the door on the new hinge side.
- ▶ Screw the upper turn hinge **firmly** into place **(with 4 Nm)** (2x Torx® 25) *Fig. 6 (4)*. Possibly make preliminary holes with a bradawl or use a cordless screwdriver.
- ▶ Apply the cover *Fig. 6 (1)* and cover *Fig. 6 (2)* to the opposite side from the outside and snap them into place.

4.3.8 Aligning the doors

- ▶ If necessary, align the doors to the appliance housing by way of the two oblong holes in the bottom turn hinge *Fig. 8 (25)* and middle turn hinge *Fig. 7 (13)*. To do so, unscrew the middle screw in the bottom turn hinge *Fig. 8 (25)*.

WARNING

Risk of injury due to the door dropping out!

If the bearing parts are not screwed into place firmly enough, the door may drop out. This may lead to severe injuries. What is more, the door may not close and therefore the appliance may fail to cool properly.

- ▶ Screw the turn hinges firmly into place with 4 Nm.
- ▶ Check all of the screws and retighten if necessary.

4.4 Insertion into a row of kitchen units

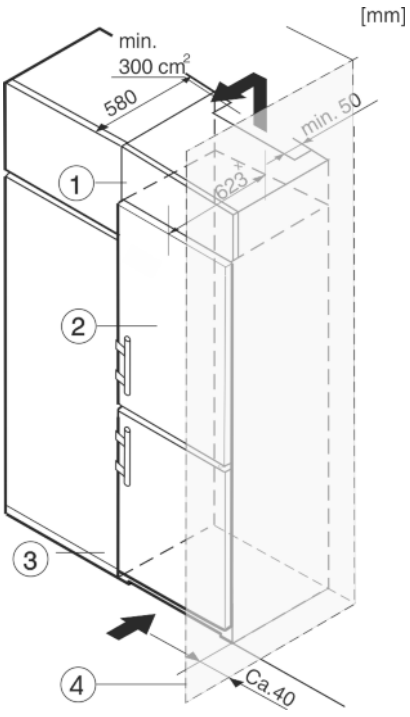

Fig. 11

(1) Top cupboard
(3) Kitchen cabinet

*** Depending on model and options**

(2) Appliance **(4)** Wall

[x] For appliances supplied with wall spacers, the measurement increases by 35 mm (see 4.2) .

The appliance can be inserted into a row of kitchen units. To match the appliance *Fig. 11 (2)* to the height of the row of units, a suitable stack cabinet *Fig. 11 (1)* can be fitted above the appliance.

When retrofitting with kitchen cabinets the appliance can be installed directly next to the cabinet *Fig. 11 (3)*. So that the doors can be opened fully the appliance must be stick out at least 65 mm[x] from the front of the cabinet. The appliance may protrude further depending on the depth of the kitchen cabinets and if wall spacers are used.

NOTICE
Danger of overheating due to insufficient air ventilation!
The compressor may be damaged if there is insufficient air ventilation.
▶ Take care to ensure adequate air ventilation.
▶ Observe the ventilation requirements.

Ventilation requirements:

- At the back of the stack cabinet there has to be a ventilation duct of at least 50 mm depth throughout the width of the stack cabinet.
- The cross section of the ventilation gap below the ceiling must be at least 300 cm^2.
- the larger the ventilation space, the more energy-saving the appliance is in operation.

If the appliance is installed with the hinges next to a wall *Fig. 11 (4)*, the distance between appliance and wall has to be at least 40 mm. This corresponds to the projection of the handle when the door is open.

4.5 Disposing of packaging

WARNING
Danger of suffocation due to packing material and plastic film!
▶ Do not allow children to play with packing material.

The packaging is made of recyclable materials:

- corrugated board/cardboard
- expanded polystyrene parts
- polythene bags and sheets
- polypropylene straps
- nailed wooden frame with polyethylene panel*

▶ Take the packaging material to an official collecting point.

4.6 Connecting the appliance

NOTICE
Failure to connect properly
Damage to the electronics.
▶ Do not use a standalone inverter.
▶ Do not use an energy saving plug.

WARNING
Failure to connect properly
Fire.
▶ Do not use an extension cable.
▶ Do not use distributor blocks.

The type of current (alternating current) and voltage at the installation site have to conform with the data on the type plate (see Appliance at a glance).

The socket must be properly earthed and fused. The tripping current for the fuse must be between 10 A and 16 A.

The socket must be easily accessible so that the appliance can be quickly disconnected from the supply in an emergency. It must be outside the area of the rear of the appliance.
▶ Check the electrical connection.
▶ Plug in the power plug.



EN

4.7 Switching on the appliance

Note
Demonstration mode is active: *DemoMode active!*, appears on the screen.
▶ Cancelling demo mode. (see Malfunction).

Note
The manufacturer recommends:
▶ Store frozen produce at -18 °C or colder.

Connect and switch on appliance approx. 2 hours before loading for the first time.

4.7.1 Switch on appliance

If the standby symbol is displayed over the whole screen:
▶ Press the standby symbol.
▷ The appliance is switched on. The display switches to the home screen.
▷ The appliance sets itself to the displayed temperature. This is shown by down arrows.

If the Standby symbol appears in the fridge compartment field:
▶ Press the standby symbol.
▷ The appliance is switched on.
▷ The appliance sets itself to the displayed temperature. This is shown by down arrows.

If the screen is black:
▶ Touch the screen.
▷ The standby symbol appears on the whole screen.
▶ Press the standby symbol.
▷ The appliance is switched on. The display switches to the home screen.
▷ The appliance is set to the displayed temperatures. This is shown by down arrows.

4.7.2 Switching the fridge compartment on

The standby symbol is displayed in the fridge compartment field.
▶ Press the standby symbol in the fridge compartment field.
▷ The fridge compartment is switched on.
▷ The fridge compartment is set to the displayed temperature. This is shown by down arrows.

5 Control

5.1 Changing the temperature unit

The temperature display can be switched from °C to °F.
▶ Press menu.
▶ Press the navigation arrow until °C is displayed.
▶ Press °F.
▷ The temperature is displayed in °F.

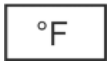

Switch from °F to °C in the same way.

5.2 Child proofing

The child-proofing function enables you to make sure that the appliance is not inadvertently switched off by playing children.

5.2.1 Switching on the child safety device

▶ Press menu.
▶ Press the navigation arrows until the child safety device is displayed.
▶ Press ON.
▷ The child safety device is switched on.

5.2.2 Switching the child safety device off

▶ Press menu.
▶ Press the navigation arrows until the child safety device is displayed.
▶ Press OFF.
▷ The child safety device is switched off.

5.3 Sabbath Mode

This function meets the religious requirements on the Sabbath or Jewish feast days. When Sabbath mode is on some of the electronic control functions are switched off. After setting Sabbath mode you no longer need to worry about indicator lamps, figures, symbols, displays, alarm messages and fans. The thawing cycle only works for the specified time without taking account of fridge use. After a power cut the appliance automatically switches back to Sabbath mode.

WARNING
Danger of food poisoning.
If a power cut occurs when Sabbath mode is enabled, this message is not saved. Once the power is restored the appliance continues to work in Sabbath mode. When this mode is over no message about the power cut is displayed on the temperature display.
If a power cut occurred during Sabbath mode:
▶ Check the food for quality. Do not eat the food if it has thawed.

- All functions are blocked until Sabbath mode is switched off.
- If functions such as SuperFrost, SuperCool, ventilation etc. are selected when Sabbath mode is switched on they remain switched on.
- No audible signals are emitted and the temperature display does not indicate any warnings or settings (such as a temperature alarm or door alarm).
- The internal light is off.

5.3.1 Switching SabbathMode on.

▶ Press menu.
▶ Press the navigation arrow until SabbathMode is displayed.
▶ Press ON.
▷ SabbathMode is switched on. Only the SabbathMode symbol appears on the screen.

SabbathMode switches off automatically after 120 hours if it has not already been switched off manually. The display switches to the home screen.

5.3.2 Switch off the SabbathMode

▶ Touch the screen.
▶ Press OFF.
▷ SabbathMode is switched off.

5.4 Refrigerator compartment

The natural circulation of air in the refrigerator compartment results in zones differing in temperature. It is coldest directly above the vegetable drawers and at the rear wall. It is warmest at the top front of the compartment and in the door.

5.4.1 Food refrigeration

▶ Store perishable food such as ready-to-serve dishes, meat products and sausages in the coldest zone. Place butter and preserves in the upper area and in the door (see Appliance at a glance).
▶ Use recyclable plastic, metal, aluminium and glass containers and cling film for wrapping.
▶ Always store liquids and food which is subject to odour or taste transfer in closed containers or cover them.
▶ Foods which give off a large amount of ethylene gas and delicate foods, such as fruit, vegetables, salad, should always be stored separately or wrapped so as not to reduce the storage life; e.g. do not store tomatoes together with kiwis or cabbage.
▶ Use the front area of the refrigerator compartment floor only for briefly putting down cooled products, e.g. when rearranging and sorting. However do not leave cooled products there otherwise they may be pushed back or tipped over when the door is closed.
▶ Do not store food too close together to enable good air circulation.

5.4.2 Setting the temperature

The temperature depends on the following factors:
- the frequency of opening the door
- the room temperature of the installation location
- the type, temperature and quantity of the food

The temperature can be set from 9 °C to 1 °C.

Recommended temperature setting: 5 °C
▶ Press the fridge compartment field.
▷ The following screen is displayed:

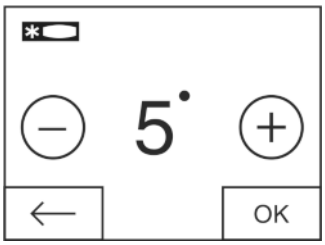

Fig. 12

Setting a higher temperature:
▶ Press plus.

Setting a lower temperature:
▶ Press minus.

The minus symbol is greyed out when the coldest temperature is selected.

The plus symbol is greyed out if it is pressed again after selecting the hottest temperature. The standby symbol is displayed on the screen.
▶ Confirm the required temperature with OK.
▷ The display switches to the home screen.
▷ The selected temperature is displayed.
▷ Up or down arrows indicate the change in temperature. The arrows are greyed out when the target temperature is reached.

5.4.3 Shelves

Moving or removing shelves

The shelves have stops preventing them from being unintentionally pulled out.

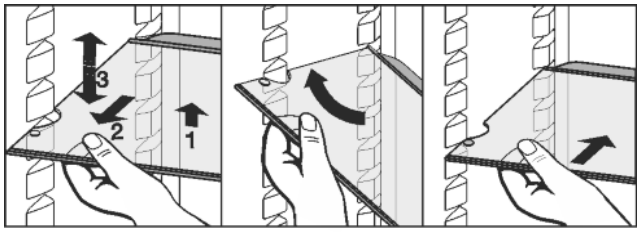

Fig. 13

▶ Lift the shelf slightly and pull forward a little.
▶ Adjust the height of the shelf. To do so, push the cut-outs along the supports.
▶ In order to remove the shelf fully, place it at a slant and pull out towards the front.
▶ Insert shelf with the raised edge pointing upwards at the back.
▷ The food does not freeze onto the rear wall.

Dismantling shelves

▶ The shelves can be dismantled for cleaning.

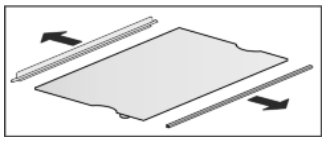

5.4.4 Using the sectioned shelf

CAUTION
Danger of laceration!
The shelf may break. The broken fragments may cause laceration.
▶ Remove only empty shelves.

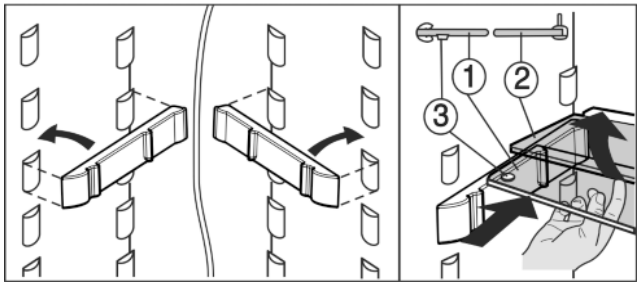

Fig. 14

▶ The glass shelf with stop face (2) has to be at the back.
▶ The glass plate (1) with pull-out stops must be at the front so that the stops (3) face downwards.
Adjusting the height:
▶ Pull the glass plates out forwards one by one.
▶ Remove the support from the catch mechanism and click into place at the required height.
Using both shelves:
▶ Lift the top glass plate and pull the bottom glass plate forwards.

5.4.5 Door racks

Moving the storage rack

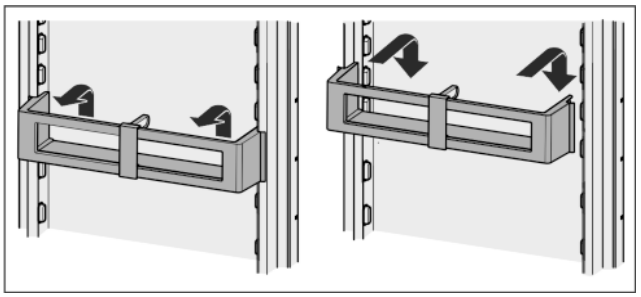

Fig. 15

Dismantling door racks

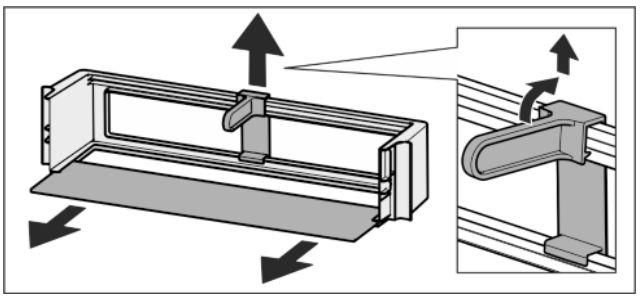

Fig. 16

▶ The door racks can be dismantled for cleaning.

5.4.6 Using the bottle holder

▶ To avoid the bottles tipping over, push the bottle holder along.

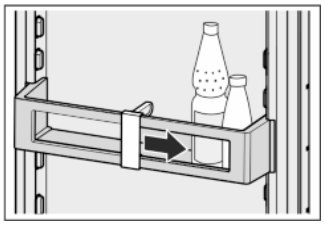

5.5 Freezer compartment

You can store frozen food, make ice cubes and freeze fresh food in the freezer compartment.

5.5.1 Freezing food

The rating plate indicates the maximum quantity of fresh food you can freeze within 24 hours (see Appliance at a glance) under “Freezing capacity ... kg/24h”.

The maximum load of frozen food for the drawers is 25 kg each and for the shelves 35 kg each.

A vacuum is generated after the door is closed. After closing the door, wait for about 1 minute and then it opens more easily.

CAUTION
Risk of injury due to broken glass!
Bottles and cans containing drinks may burst when being frozen. This applies particularly to sparkling drinks.
▶ Do not freeze bottles and cans containing drinks!

In order that the food is rapidly frozen through to the core, do not exceed the following quantities per pack:

- Fruit, vegetables up to 1 kg
- Meat up to 2.5 kg

▶ Pack the food in portions in freezer bags, reusable plastic, metal or aluminium containers.

5.5.2 Storage life

Standard values for the storage life of various types of food in the freezer compartment:	
Ice-cream	2 to 6 months
Sausage, ham	2 to 6 months
Bread, bakery products	2 to 6 months
Game, pork	6 to 10 months
Fatty fish	2 to 6 months
Lean fish	6 to 12 months
Cheese	2 to 6 months
Poultry, beef	6 to 12 months
Vegetables, fruit	6 to 12 months

The values indicated for storage life are standard ones.

5.5.3 Thawing food

- in the refrigerator compartment
- in a microwave oven
- in a conventional or fan oven
- at room temperature

▶ Remove only as much food as is required. Use thawed food as quickly as possible.
▶ Food once thawed should be re-frozen only in exceptional cases.

5.5.4 SuperFrost

With this function you can freeze fresh food quickly through to the core. The appliance operates with maximum refrigeration. The noise of the refrigeration unit may be temporarily louder as a result.

In addition, frozen food already in storage is given a “cold reserve”. The food stays frozen longer as a result when you defrost the appliance.

The maximum amount of fresh food which can be frozen in 24 h is indicated on the type plate under “freezing capacity ... kg/24h”. This amount varies according to the model and climate rating.

You have to activate SuperFrost in good time, depending on how much fresh food is to be frozen: about 6 hours before placing the food inside in case of small amounts and about 24 hours in advance in case of the maximum amount of food to be frozen.

Wrap produce and spread it out as far as possible. Do not allow produce to be frozen to touch produce that is already frozen to prevent the latter thawing.

You do not have to activate SuperFrost in the following cases:

- when placing frozen food in the freezer
- when freezing up to approx. 1 kg fresh food daily

Switching SuperFrost on.

▶ Press menu.
▶ Press the navigation arrow until SuperFrost is displayed.
▶ Press ON.
▷ SuperFrost is switched on.
▷ The freezer temperature goes down and the appliance works at maximum cooling capacity.
If there is a small amount of frozen food:
▶ wait about 6 hours.
▶ Place packaged food in the bottom drawers.
With the maximum amount of frozen food (see model plate):
▶ wait about 24 hours.
▶ Remove bottom drawer and place the food into the appliance directly, so that it is in contact with the bottom or side walls.
▷ SuperFrost switches off automatically after about 65 hours.
▷ The SuperFrost symbol is greyed out.
▶ Put the food in the drawers and close them again.
▷ The appliance works in normal mode again.

Switching off SuperFrost

▶ Press menu.
▶ Press the navigation arrow until SuperFrost is displayed.
▶ Press OFF.
▷ SuperFrost is switched off.

5.5.5 Drawers

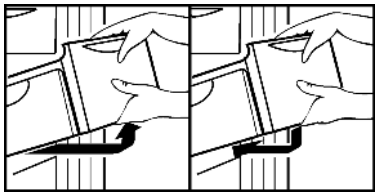

▶ To store frozen food directly on the shelves: pull the drawer forwards and lift it out.

CAUTION
Danger of cuts!
The shelf can break. You can cut yourself on the broken pieces.
▶ Hold the shelf firmly.

5.5.6 Shelves

▶ To remove the shelf: lift up at the front and pull out.
▶ To put the shelf back: simply push in as far as it will go.

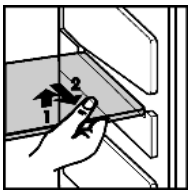

5.5.7 VarioSpace

Apart from being able to remove the drawers, you can also remove the shelves, creating space for large items of frozen food. Poultry, meat, large pieces of game and high bakery products can be frozen in one piece and prepared.

▶ The maximum load of frozen food for the drawers is 25 kg each and for the shelves 35 kg each.

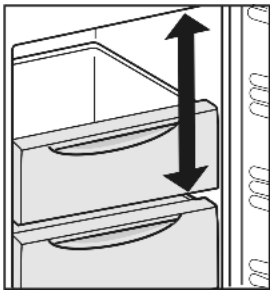

6 Maintenance

6.1 Manual defrosting

Fridge compartment:

The **refrigerator compartment** is defrosted automatically. The defrost water evaporates as a result of the heat of the compressor. Drops of water on the rear wall are perfectly normal.

▶ Regularly clean the drain opening to allow the water to flow away (see 6.2) .

Freezer compartment:

A layer of frost or ice can build up in the **freezer compartment** after a long period of operation.

The layer of frost or ice builds up faster if the appliance is opened often or if the food is warm when placed inside. However, a thick layer of ice will increase the appliance's energy consumption. You should therefore defrost the appliance regularly.

Thawing process:

CAUTION
Risk of injury and damage as a result of hot steam!
- ▶ Do not use electric heaters or steam cleaners, naked flames or defrosting sprays for defrosting.
- ▶ Do not remove ice using sharp instruments.

- ▶ Switch on SuperFrost one day before defrosting.
- ▷ The frozen goods are provided with a "cold reserve".
- ▶ Switch off the appliance.
- ▶ Pull out the power plug or switch off the fuse.
- ▶ If possible, put the frozen goods in the freezer drawer, wrapped in newspaper or a blanket, and store in a cool place.
- ▶ Place a pan with hot, not boiling water on a middle shelf.

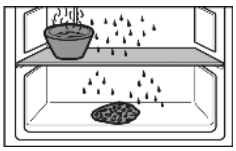

- ▷ Defrosting is speeded up.
- ▶ Leave the door of the appliance open while defrosting.
- ▶ Remove detached pieces of ice.
- ▶ If necessary, pick up defrost water several times, using a sponge or cloth.
- ▶ Clean the appliance (see 6.2) .

6.2 Cleaning the appliance

WARNING
Risk of injury and damage as a result of hot steam!
Hot steam can lead to burns and can damage the surfaces.
- ▶ Do not use any steam cleaners!

NOTICE
Incorrect cleaning damages the appliance!
- ▶ Do not use cleaning agents in concentrated form.
- ▶ Do not use any scouring or abrasive sponges or steel wool.
- ▶ Do not use any sharp or abrasive cleaning agents, nor any that contain sand, chloride or acid.
- ▶ Do not use chemical solvents.
- ▶ Do not damage or remove the type plate on the inside of the appliance. It is important for the customer service.
- ▶ Do not pull off, bend or damage cables or other components.
- ▶ Do not allow any cleaning water to enter the drain channel, ventilation grille or electrical parts.
- ▶ Please use soft cleaning cloths and a universal pH-neutral cleaning agent.
- ▶ Please use cleaning and care products suitable for contact with foodstuffs in the appliance interior.

- ▶ **Empty appliance.**
- ▶ **Pull out the power plug.**



- ▶ Clean **plastic outer and inner surfaces** with lukewarm water and a little washing-up liquid.

NOTICE
Risk of damage from stainless steel care products!
The **stainless steel doors** and **stainless steel side panels** are treated with a premium surface finish.
Stainless steel care products attack these surfaces.



- ▶ Only use a soft, clean cloth to wipe down **finished door and side panel surfaces** and **painted door and side panel surfaces**. To remove heavy dirt, use a little water or neutral detergent. Alternatively, you can use a micro-fibre cloth.

Do not treat the lettering on the painted door surfaces with harsh, abrasive agents. Wipe off any dirt with a soft cloth and some water or neutral cleaner.*

- ▶ Clean **drain hole**: Remove deposits with a narrow instrument, e.g. a cotton bud.

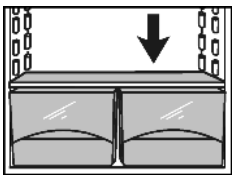

- ▶ Most of the **parts** can be dismantled for cleaning: see the relevant chapter.
- ▶ Clean **items of equipment** by hand with lukewarm water and a little washing-up liquid.

After cleaning:
- ▶ Wipe dry the appliance and items of equipment.
- ▶ Connect the appliance and switch it on again.
- ▶ Switch on SuperFrost (see 5.5.4) .
  When the temperature is sufficiently cold:
- ▶ Put the food back inside.

6.3 Customer service

First of all check whether you can eliminate the fault yourself (see Malfunction). If this is not possible, contact Customer Services. You can find the address in the enclosed customer service list.

WARNING
Risk of injury if repair work is not carried out professionally!
- ▶ Have any repairs and action - not expressly specified - on the appliance and mains cable carried out by service personnel only. (see Maintenance)

Displaying the appliance description (model and index), service no. (service) and serial no. (S. no.) on the screen:
- ▶ Press menu.
- ▶ Press the navigation arrows until the appliance information symbol is displayed.



- ▶ Press the appliance information symbol.
- ▷ The appliance information is displayed.
- ▶ Note down the appliance information.
- ▶ To return to the home screen press the Back symbol.

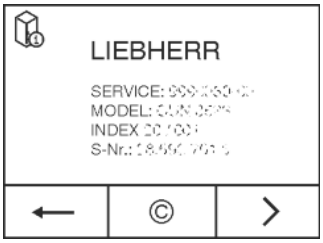

- ▶ Close the door.
- ▶ Contact customer service and give them the required appliance information.
- ▷ This will help us to provide you with a faster, more accurate service.
- ▶ Follow any further instructions given by Customer Services.

Alternatively you can read off the appliance information from the model plate:

▶ Read off the appliance name *Fig. 17 (1)*, service no. *Fig. 17 (2)* and serial no. *Fig. 17 (3)* from the model plate. The model plate can be found on the inside of the appliance on the left.

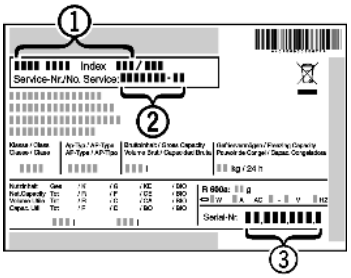

Fig. 17

Licence agreements:

Licences used can be viewed at ©.

▶ © print.

7 Malfunctions

Your appliance is designed and manufactured for a long life span and reliable operation. If a malfunction nonetheless occurs during operation, check whether it is due to a handling error. In this case you will have to be charged for the costs incurred, even during the warranty period. You may be able to rectify the following faults yourself:

Appliance does not work.

→ The appliance is not switched on.

▶ Switch on the appliance.

→ The power plug is not properly inserted in the wall socket.

▶ Check power plug.

→ The fuse of the wall socket is not in order.

▶ Check fuse.

The compressor runs for a long time.

→ The compressor switches to a low speed when little cold is needed. Although the running time is increased as a result, energy is saved.

▶ This is normal in energy-saving models.

→ SuperFrost is activated.

▶ The compressor runs for longer in order to rapidly cool the food. This is normal.

A LED on the bottom rear of the appliance (at the compressor) flashes regularly every 15 seconds*.

→ The inverter is equipped with a diagnostic LED.

▶ The flashing is normal.

Excessive noise.

→ Due to the various speed steps, speed-regulated* compressors can generate different running noises.

▶ The sound is normal.

A bubbling and gurgling noise.

→ This noise comes from the refrigerant flowing in the refrigeration circuit.

▶ The sound is normal.

A quiet clicking noise.

→ The noise is produced whenever the refrigeration unit (motor) automatically switches on or off.

▶ The sound is normal.

A hum. It is briefly a little louder when the refrigeration unit (the motor) switches on.

→ The refrigeration increases automatically when the SuperFrost, function is activated, fresh food has just been placed in the appliance or the door has been left open for a while.

▶ The sound is normal.

→ The ambient temperature is too high.

▶ Solution: (see 1.2)

Vibratory noise.

→ The appliance is not fixed to the ground. The running of the cooling unit therefore makes objects and adjacent furniture vibrate.

▶ Adjust appliance via the height-adjustable feet.

▶ Move bottles and containers apart.

DEMO is displayed in the top right corner of the screen.

→ DEMO mode is activated.

▶ Unplug the appliance.

▶ Plug the appliance in again.

▷ The DEMO symbol appears on the screen. In addition some time elapses.

▶ Press STOP.

The outer surfaces of the appliance are warm*.

→ The heat of the refrigeration circuit is used to prevent condensate from forming.

▶ This is normal.

The temperature is not cold enough.

→ The door of the appliance is not properly closed.

▶ Close the door of the appliance.

→ Insufficient ventilation.

▶ Keep ventilation grille clear, and clean it.

→ The ambient temperature is too high.

▶ Solution: (see 1.2) .

→ The appliance was opened too frequently or for too long.

▶ Wait to see whether the appliance reaches the required temperature by itself. If not, please contact the after sales service (see Maintenance).

→ Too much fresh food was placed inside without SuperFrost.

▶ Solution: (see 5.5.4)

→ The appliance is too close to a source of heat (stove, heater etc).

▶ Change the position of the appliance or the source of heat.

The internal light does not come on.

→ The appliance is not switched on.

▶ Switch on the appliance.

→ The door was open longer than 15 min.

▶ The interior light automatically switches off if the door has been open for about 15 min.

→ The LED illumination is defective or the cover is damaged:

WARNING

Risk of injury due to electric shock!

Live parts are located under the cover.

▶ Have the LED interior light changed or repaired only by the customer service or by specialized personnel trained for the purpose.

WARNING

Danger of injury by LED lamp!

The light intensity of the LED illumination corresponds to laser class 1/1M.

If the cover is defective:

▶ Do not look into the illumination with optical lenses from the immediate proximity. This can cause injury to the eyes.

With an ambient temperature below 18 °C the device is slightly warmed in places on the inner surface of the fridge compartment's right side wall.

→ This is a necessary part of the function.

▶ This is normal.

The door seal is defective or needs to be replaced for another reason.

→ The door seal can be replaced. It can be replaced without the need for special tools.

▶ Contact Customer Service (see Maintenance):

The unit has iced up or condensation has formed.

→ The door seal may have also slipped out of its groove.

▶ Check to ensure that the door seal is seated properly in the groove.

8 Messages

Error messages and reminders are displayed by an audible signal and a message on the screen. The audible signal gets louder and louder when error messages appear. It only stops when the message is confirmed. Highest priority messages are displayed first if several occur at the same time. Each message must be cleared separately.

The message stays in the menu field as long as it is active or the fault is not eliminated.

Note
Details on the message can be displayed again via the menu field.

▶ Press menu.

▶ Press the message symbol.

▶ The display switches to the next message when you press one. After the last active message the display switches to the home screen.

Note
Details on the message can be displayed again on the Home screen.

▶ Press messages symbol.

For several active messages, the navigation bar states the number and the current position in the messages.

To display the next message, press *OK*.

After the last active message the display switches to the home screen.

Door alarm



An audible warning sounds if the door is open for longer than 60 seconds. The door alarm symbol appears on the display. The audible warning stops automatically when the door is closed.

The audible warning can be switched off when the door is open. The audible alarm is switched off while the door is open.

▶ Press the door alarm symbol.

▷ The door alarm stops.

▷ The display switches to the home screen.

Temperature alarm



An audible signal sounds if the temperature is not cold enough. The temperature alarm symbol appears on the display.

The temperature had risen too high during the last few hours or days. When the fault is eliminated the appliance continues to work at the last temperature setting.

The reason for too high a temperature may be:

- hot, fresh food was inserted
- too much warm room air flowed in when rearranging and removing food
- the power was cut off for a while
- the appliance is faulty

▶ Press the temperature alarm symbol.

▷ The audible signal stops. The warmest temperature reached during the malfunction is displayed on the screen.

▶ Press the screen or wait for 30 seconds.

▷ The display switches to the home screen. Arrows and the temperature alarm symbol appear in the relevant temperature field. In addition the messages symbol is displayed in the menu field.

▶ Check the food for quality. Do not consume spoiled food. Do not re-freeze defrosted food,

▷ The symbols are greyed out when the target temperature is reached.

If the alarm status persists or the temperature cannot be reset independently:

(see Malfunction).

Appliance faults



An audible warning sounds. The appliance fault symbol appears on the display with the relevant error code.

An appliance component indicates a fault.

▶ Note down the fault code.

▶ Press the appliance fault symbol.

▷ The audible signal stops. The display switches to the home screen.

▶ Contact Customer Services (see Maintenance).

If the fault related to a specific temperature zone, the appliance fault symbol is displayed instead of the temperature in the zone's temperature field.

9 Decommissioning

9.1 Switching the appliance off

Note
If the appliance or the freezer or fridge compartment cannot be switched off the child safety device has been switched on.

▶ Switch the child safety device off (see 5.2.2) .

9.1.1 Switch off the appliance from the menu

The whole appliance is switched off. The screen goes black.

▶ Press menu.

▶ Press the navigation arrows until the standby symbol is displayed.



▶ Press OK.

▷ The standby symbol flashes on the whole screen. The whole appliance is switched off.

▷ After 10 minutes the standby symbol goes out.

9.1.2 Switching the fridge compartment off

If necessary, the fridge compartment can be switched off separately.

▶ Press the fridge compartment field.

▶ Press plus.

▷ The plus symbol is greyed out if it is pressed again after selecting the hottest temperature. The standby symbol is displayed on the screen.

▶ Press OK.

▷ The standby symbol is displayed in the fridge compartment field.

▷ The fridge compartment is switched off.

9.2 Taking the appliance out of service

▶ Empty the appliance.

▶ Switch off the appliance (see Decommissioning).

▶ Remove mains connector.

▶ Clean the appliance (see 6.2) .



▶ Leave the door open to prevent odour.

10 Disposing of the appliance



The appliance contains some reusable materials and should be disposed of properly - not simply with unsorted household refuse. Appliances which are no longer needed must be disposed of in a professional and appropriate way, in accordance with the current local regulations and laws.

When disposing of the appliance, ensure that the refrigeration circuit is not damaged to prevent uncontrolled escape of the refrigerant it contains (data on type plate) and oil.

- ▶ Disable the appliance.
- ▶ Pull out the plug.
- ▶ Cut through the connecting cable.

Liebherr-Hausgeräte Marica EOOD * 4202 Radinovo * Bezirk Plovdiv * Bulgarien * www.liebherr.com