Operating instructions

Combined fridge-freezer

EN

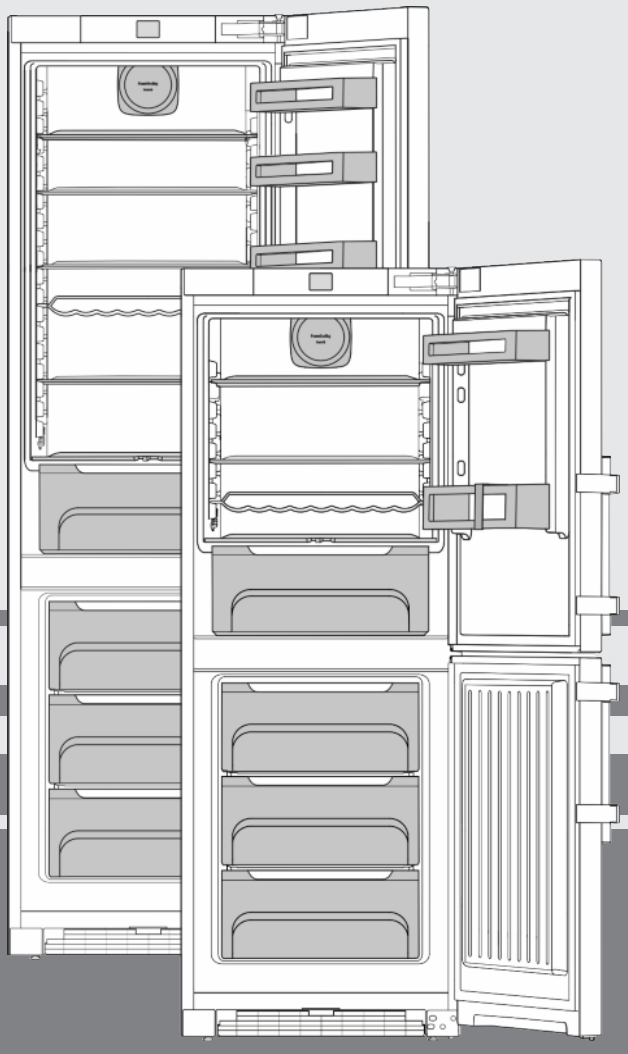

070815 **7086090 - 01**

CP(ef)/ CN(ef/bs) ... C

LIEBHERR

Contents

1	**Appliance at a glance**	**2**
1.1	Overview of the appliance and its equipment	2
1.2	Range of appliance use	2
1.3	Conformity	3
1.4	External dimensions of the appliance	3
1.5	Saving energy	3
1.6	Example of contents arrangement	4
1.7	Smart device	4
2	**General safety information**	**4**
3	**Controls and displays**	**5**
3.1	Home screen	5
3.2	Operating structure	5
3.3	Navigation	5
3.4	Display symbols	6
3.5	Appliance options	6
4	**Putting into operation**	**6**
4.1	Transporting the appliance	6
4.2	Installing the appliance	6
4.3	Reversing the door	7
4.4	Insertion into a row of kitchen units	13
4.5	Disposing of packaging	13
4.6	Connecting the appliance	13
4.7	Switching on the appliance	14
4.8	Inserting the FreshAir filter.	14
4.9	Setting the clean ventilation grid timer	14
5	**Control**	**14**
5.1	Changing the temperature unit	14
5.2	Child proofing	14
5.3	Sabbath Mode	15
5.4	Refrigerator compartment	15
5.5	Freezer compartment	17
6	**Maintenance**	**18**
6.1	Change the FreshAir filter	18
6.2	Defrosting with NoFrost	19
6.3	Manual defrosting	19
6.4	Cleaning the ventilation grid	19
6.5	Cleaning the appliance	20
6.6	Customer service	20
7	**Malfunctions**	**20**
8	**Messages**	**21**
9	**Decommissioning**	**22**
9.1	Switching the appliance off	22
9.2	Taking the appliance out of service	22
10	**Disposing of the appliance**	**23**

The manufacturer works constantly on the further development of all the types and models. Therefore please understand that we have to reserve the right to make design, equipment and technical modifications.

To get to know all the benefits of your new appliance, please read the information contained in these instructions carefully.

The instructions apply to several models. Differences may occur. Text relating only to specific appliances is marked with an asterisk (*).

Instructions for action are marked with a ▶, the results of action are marked with a ▷.

1 Appliance at a glance

1.1 Overview of the appliance and its equipment

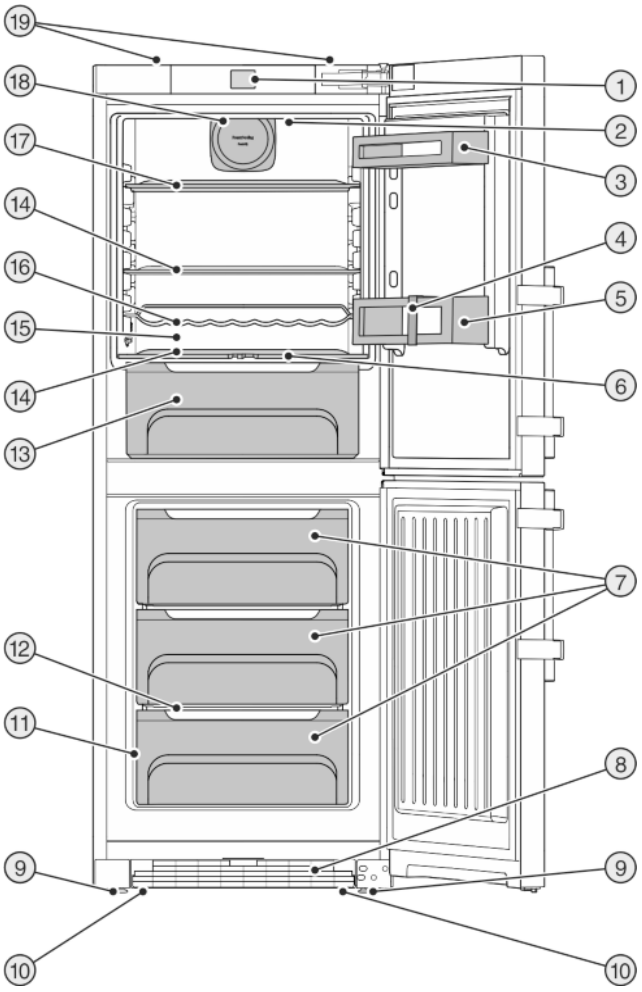

Fig. 1

(1) Operating and control elements
(2) Internal LED light
(3) Can rack
(4) Bottle holder
(5) Bottle shelf
(6) Humidity adjustment plate
(7) Freezer compartment
(8) Ventilation grid
(9) Adjusting feet
(10) Front transport handles, rear transport castors
(11) Model plate
(12) Variospace
(13) BioCool box, controllable
(14) Shelf
(15) Coldest zone
(16) Bottle shelf
(17) Shelf, can be split
(18) Fan, with holder for fresh air filter
(19) Rear transport handles

Note

▶ Shelves, drawers and baskets are arranged for optimum energy efficiency on delivery.

1.2 Range of appliance use

Intended use

The appliance is only suitable for refrigerating food in a domestic or domestic-like environment. This includes, for example, using

- in staff kitchenettes, bed and breakfast establishments,
- by guests in country cottages, hotels, motels and other accommodation,
- for catering and similar services in the wholesale trade.

All other types of use are not permitted.

Foreseeable misuse

The following applications are expressly prohibited:

- Storage and cooling of medicines, blood plasma, laboratory compounds or similar materials and products subject to the Medical Devices Directive 2007/47/EC
- Use in potentially explosive areas
- Use on movable bases such as ships, rail transport or planes
- Storage of live animals

Improper use of the appliance can lead to damage to or spoilage of the stored goods.

Climate rating definitions

The appliance is set to operate within specific ambient temperature limits according to its climate rating. The correct climate rating for your appliance is indicated on the type plate.

Note

▶ Keep to the specified ambient temperatures in order to guarantee that the appliance works properly.

Climate rating	for ambient temperatures of
SN	10 °C to 32 °C
N	16 °C to 32 °C
ST	16 °C to 38 °C
T	16 °C to 43 °C

1.3 Conformity

The refrigerant circuit is tested for leakage. The appliance complies with the relevant safety regulations and EC Directives 2006/95/EC, 2004/108/EC, 2009/125/EC and 2010/30/EU.

Note for test institutions:

Tests are to be carried out according to the applicable standards and guidelines.
Preparation and testing of the appliances must be carried out taking the **manufacturer's loading plans** and the **notes in the operating manual** into account.

1.4 External dimensions of the appliance

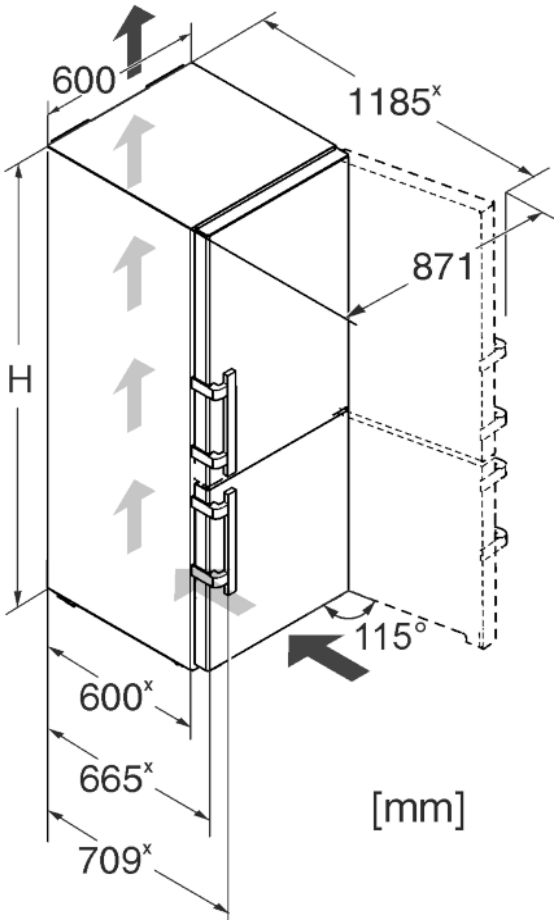

Fig. 2

Model	Appliance height H (mm)
CN(ef) 37..	1650
CN(ef/bs) 43.. / CP(ef) 43..	1850
CN(ef) 48.. / CP(ef) 48..	2010

x If wall spacers are used, the dimensions increase by 15 mm (see 4.2) .

Dimensions when the door is open apply to an opening angle of 115 °. Clearance dimensions vary according to the opening angle.

1.5 Saving energy

- Always ensure good ventilation. Do not cover ventilation openings or grille.
- Always keep fan louvres clear.
- Do not place appliance in areas of direct sunlight or next to a stove, heater or similar object.
- The energy consumption depends on the installation conditions, e.g. the ambient temperature (see 1.2) .
- Keep the time the appliance is open to a minimum.
- The lower the temperature setting, the higher the power consumption.
- Store food logically. (see Appliance at a glance).
- Ensure that all food is well packed and covered for storage. This will prevent frost from forming.
- Remove food as needed in order that it does not warm too much.
- First cool warm food to room temperature before storing it .
- Defrost frozen food in the refrigerator.

- If there is a thick layer of frost in the appliance: defrost the appliance.*

1.6 Example of contents arrangement

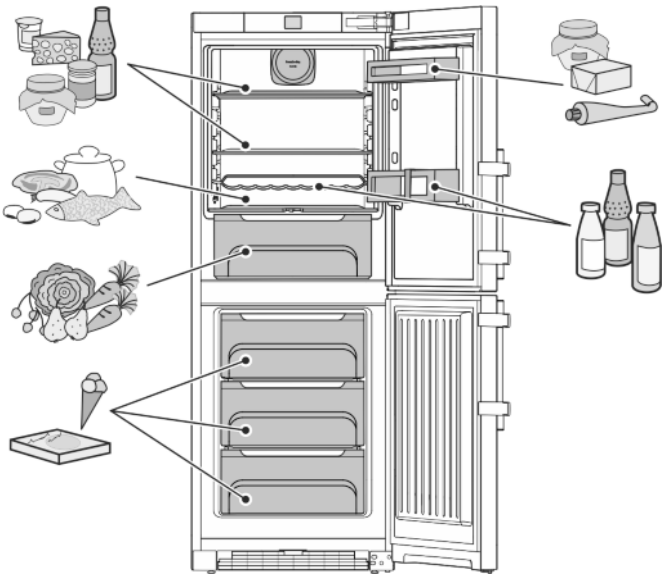

Fig. 3

1.7 Smart device

The appliance is ready for integration into a smart home and for extended services. Other options can be selected with a SmartDeviceBox. This is activated via the MyLiebherr customer portal.



You will find more information about availability and pre-requisites and the individual options on the website www.smartdevice.liebherr.com.

2 General safety information

Danger for the user:

- This appliance can be used by children of 8 years old and over, and also by persons with restricted physical, sensory or mental capacity or lack of experience and knowledge, if they are supervised or have been instructed on safe use of the appliance and understand the resulting risks. Children must not be allowed to play with the appliance. Cleaning and user maintenance must not be carried out by children without supervision.
- When disconnecting the appliance from the supply, always take hold of the plug. Do not pull the cable.
- In the event of a fault pull out the mains plug or deactivate the fuse.
- Do not damage the mains power cable. Do not operate the appliance with a defective mains power cable.
- Only customer service or other specially trained staff may repair or perform other operations on the appliance.
- Only assemble, connect and dispose of the appliance according to the instructions.
- Please keep these instructions in a safe place and pass them on to any subsequent owners.
- Special lights, such as LED lights on the appliance, are used to illuminate the interior of the appliance and are not suitable for room lighting.

Fire hazard:

- The refrigerant R 600a is environmentally friendly but flammable. Escaping refrigerant may ignite.
  - Do not damage the refrigerant circuit pipes.
  - Do not allow naked flames or ignition sources to enter the appliance.
  - Do not use any electrical appliances in the interior (e.g. steam cleaners, heaters, ice cream maker etc.).
  - If refrigerant escapes: remove any naked flames or sources of ignition from the leakage area. Ventilate the room well. Notify the after-sales service.
- Do not store explosives or sprays using combustible propellants such as butane, propane, pentane, etc. in the appliance. To identify these spray cans, look for the list of contents printed on the can, or a flame symbol. Gases possibly escaping may ignite due to electrical components.
- Keep burning candles, lamps and other items with naked flames away from the appliance so that they do not set the appliance on fire.
- Please be sure to store alcoholic drinks or other packaging containing alcohol in tightly closed containers. Any alcohol that leaks out may be ignited by electrical components.

Danger of tipping and falling:

- Do not misuse the plinth, drawers, doors etc. as a step or for support. This applies particularly to children.

Danger of food poisoning:

- Do not consume food which has been stored too long.

Danger of frostbite, numbness and pain:

- Avoid lasting skin contact with cold surfaces or refrigerated/frozen food or take protective steps, e.g. wear gloves. Do not consume ice cream, water ice or ice cubes immediately and do not consume them too cold.

Danger of injury and damage:

*** Depending on model and options**

- Hot steam can lead to injury. Do not use electrical heating or steam cleaning equipment, open flames or defrosting sprays to defrost.
- Do not use sharp implements to remove the ice.

Danger of crushing:

- Do not hold the hinge when opening and closing the door. Fingers may get caught.

Symbols on the appliance:

	The symbol can be located on the compressor. It refers to the oil in the compressor and indicates the following danger: Swallowing or inhaling can be fatal. This is only relevant for recycling. There is no danger in normal operation.

Please observe the specific information in the other sections:

	DANGER	identifies a situation involving direct danger which, if not obviated, may result in death or severe bodily injury.
	WARNING	identifies a dangerous situation which, if not obviated, may result in death or severe bodily injury.
	CAUTION	identifies a dangerous situation which, if not obviated, may result in minor or medium bodily injury.
	NOTICE	identifies a dangerous situation which, if not obviated, may result in damage to property.

	Note	identifies useful information and tips.

3 Controls and displays

3.1 Home screen

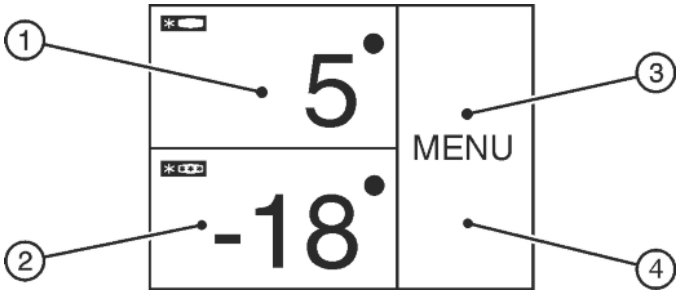

Fig. 4

(1) Fridge compartment field
(2) Freezer compartment field
(3) Menu field
(4) Screen

The home screen is the first screen the user sees. All settings can be made from there.

All functions can be called up by touching the screen and values can be changed.

3.2 Operating structure

Fridge compartment field

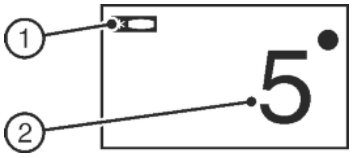

Fig. 5

(1) Fridge compartment symbol
(2) Fridge compartment temperature display

The fridge compartment temperature is displayed in the fridge compartment field.

The following settings can be entered:

- Temperature settings
- Switching the fridge compartment on and off

Freezer compartment field

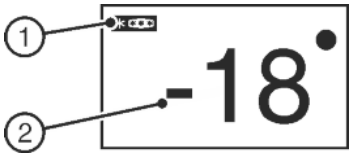

Fig. 6

(1) Freezer compartment symbol
(2) Freezer compartment temperature display

The freezer compartment temperature is displayed in the freezer compartment field.

The following settings can be entered:

- Temperature settings
- Turning the freezer compartment on and off

The fridge compartment is also turned off when the freezer compartment is turned off.

Menu field

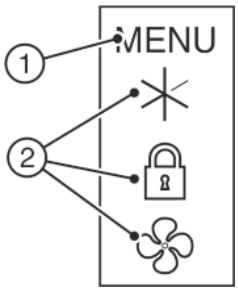

Fig. 7

(1) Main menu
(2) Option selected

The menu field gives access to the appliance options and settings. Selected options are also displayed.

3.3 Navigation

Touch the menu to access the individual options. An audible signal sounds after confirming an option or a setting. The display switches to the home screen.

The appliance is operated using the following symbols:



Standby:

Switches the appliance or temperature zone on.



Menu:

Calls up options.



Minus / Plus:

Changes settings (e.g. adjusts temperature, time setting for SuperCool).



Left/right navigation arrow:

Selects options and navigates through the menu.

You can scroll through the individual options using the navigation arrows. The first option is displayed again after the last one.

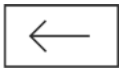

Back:

Cancels the selection.

The display switches to the next higher level or to the home screen



OK:

Confirms the selection.

After confirmation the display switches to the home screen.

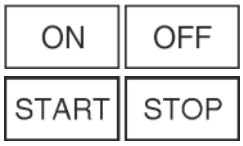

ON / OFF, START / STOP

Starts/ stops options.

After selecting or cancelling an option the display switches to the home screen.



RESET:

Resets timer.



Access to customer service

Note

If no selection is made after 1 minute the display switches to the home screen.

3.4 Display symbols

Display symbols provide information on the current appliance status:



Up arrows:

The temperature increases.



Down arrows:

The temperature reduces.



Standby:

The appliance or temperature zone is switched off.



Messages:

There are active error messages and reminders.

3.5 Appliance options

You can select or set the following options; explanations and setting options, (see Control):

Symbol	Option
	SuperCool[x]
	SuperFrost[x]
	Fan[x]
	SabbathMode
	Child safety device[x]
	Temperature unit

[x] If the option is selected, the relevant symbol is displayed in the menu field.

If more than 6 selected options are selected only 4 options are displayed in the menu field. The other options are displayed by pressing the bottom navigation arrow. Pressing the navigation arrow repeatedly takes you back to the home screen.

The symbol disappears if the option ends or is disabled.

4 Putting into operation

4.1 Transporting the appliance

CAUTION

Risk of injury and danger of damage as a result of incorrect transport!

- ▶ Transport the appliance in a packed condition.
- ▶ Transport the appliance upright.
- ▶ Do not transport the appliance without assistance.

4.2 Installing the appliance

WARNING

Fire hazard due to dampness!

If live parts or the mains lead become damp this may cause short circuits.

- ▶ The appliance is designed for use in enclosed areas. Do not operate the appliance outdoors or in areas where it is exposed to splash water or damp conditions.

WARNING

Risk of fire due to short circuit!

If the mains cable/connector of the appliance or of another appliance touch the rear of the appliance, the mains cable/ connector may be damaged by the appliance vibrations, leading to a short circuit.

- ▶ Stand the appliance so that it is not touched by connectors or main cables.
- ▶ Do not plug the appliance or any others into sockets located near the rear of the appliance.

WARNING

Fire hazard due to refrigerant!

The refrigerant R 600a is environmentally friendly but flammable. Escaping refrigerant may ignite.

- ▶ Do not damage the piping of the refrigeration circuit.

WARNING
Fire hazard and danger of damage!
▶ Do not place appliances emitting heat e.g. microwaves, toasters etc. on the appliance!

WARNING
Blocked ventilation openings pose a risk of fire and damage!
▶ Always keep the ventilation openings clear. Always ensure that the appliance is properly ventilated!

NOTICE
Risk of damage due to condensate!
▶ Do not install the appliance directly alongside a further refrigerator/freezer.

- ❑ In the event that the appliance is damaged, contact the supplier immediately before connecting to the mains.
- ❑ The floor at the site must be flat and level.
- ❑ Do not install the appliance in a location where it is exposed to direct radiation of the sun, next to a cooker, heater and similar.
- ❑ Always stand the appliance backed directly to the wall using the enclosed wall spacers (see below).
- ❑ The appliance may be moved only when it is empty.
- ❑ Do not install the appliance without assistance.
- ❑ The more R 600a refrigerant there is in the appliance, the larger the room in which the appliance is standing needs to be. In rooms that are too small, a flammable mix of gas and air may be created if there is a leak. According to the EN 378 standard, every 11 g of R 600a refrigerant requires at least 1 m^3 space in the room for the appliance. The amount of refrigerant in your appliance is on the type plate inside the appliance.

▶ Remove the protective film from the outside of the appliance.*

NOTICE
Risk of damage from stainless steel care products!
The **stainless steel doors** and **stainless steel side panels** are treated with a premium surface finish.
Stainless steel care products attack these surfaces.

▶ Only use a soft, clean cloth to wipe down **finished door and side panel surfaces** and **painted door and side panel surfaces**. To remove heavy dirt, use a little water or neutral detergent. Alternatively, you can use a micro-fibre cloth.

▶ Remove the protective film from the decorative trims and drawer fronts.
▶ Remove all transit supports.

Spacers must be used to achieve the declared energy consumption and to prevent condensation in the event of high surrounding humidity. This increases the appliance depth by about 15 mm. The appliance will work perfectly well without the spacers but will have a slightly higher energy consumption.

▶ If your appliance comes with wall spacers, mount these on the back of the appliance, bottom left and right.

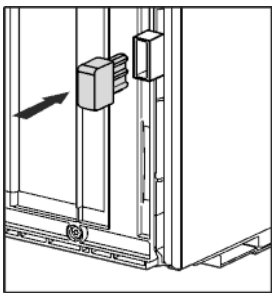

▶ Dispose of packaging material (see 4.5) .
▶ Align the appliance so that it stands firmly and on a level by applying the accompanying spanner to the adjustable-height feet (A) and using a spirit level.

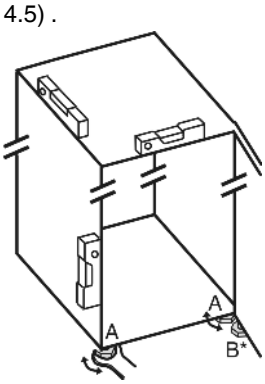

▶ Then support the door: Use saddle wrench SW10 to unscrew the base on mounting block (B) until it makes contact with the ground, then continue turning it for a further 90°.

Note
▶ Clean the appliance (see 6.5) .

If the appliance is installed in a very damp environment, condensate may form on the outside of the appliance.
▶ Always see to good ventilation at the installation site.

4.3 Reversing the door

If necessary, you can change the way the door opens:

Ensure that the following tools are available:

- ❑ Torx® 25 (T25)
- ❑ Torx® 15 (T15)
- ❑ Slotted screwdriver
- ❑ Saddle wrench SW10
- ❑ Spirit level
- ❑ Open-ended wrench supplied with the T25 tool
- ❑ If necessary, a cordless screwdriver
- ❑ Get a stepladder if necessary
- ❑ If necessary, two people for the assembly work

4.3.1 Removing the top door

Note
▶ Remove any food from the door racks before removing the door, so that no food falls out.

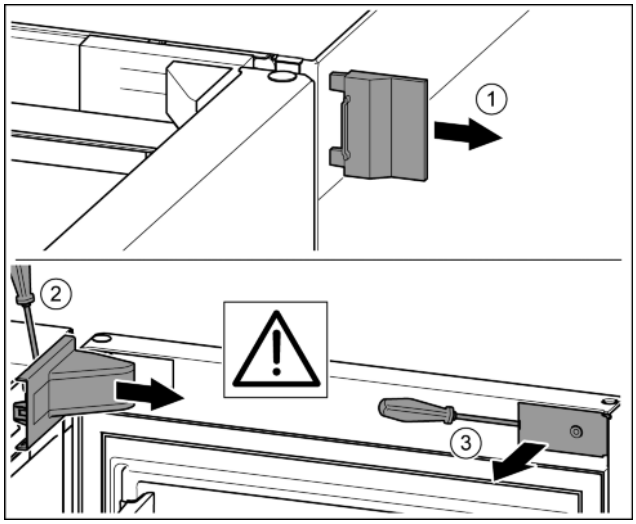

Fig. 8

▶ Open the door.

NOTICE
Risk of damage!
If the door seal is damaged, the door may fail to close properly and the cooling will be inadequate.
▶ Do not damage the door seal with the screwdriver!

▶ Remove the outer cover. *Fig. 8 (1)*
▶ Unlatch and undo the bearing bracket cover with a screwdriver. Remove the bearing bracket cover. *Fig. 8 (2)*
▶ Unlatch the cover plate with a slotted screwdriver and swivel it to one side. *Fig. 8 (3)*

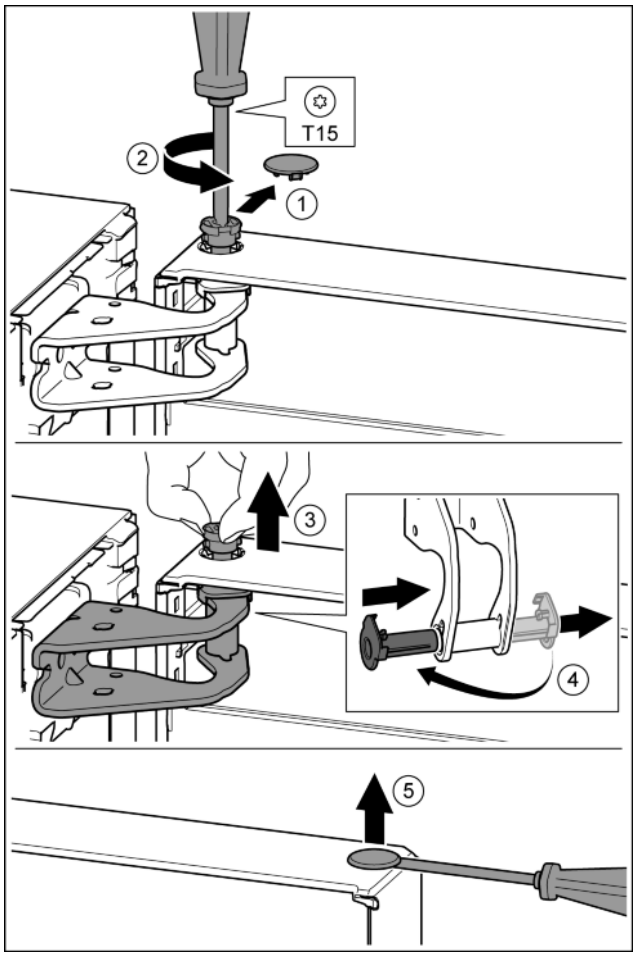

Fig. 9

CAUTION
Risk of injury if the door tips!
▶ Take good hold of the door.
▶ Set down the door carefully.

▶ Carefully remove the safety cover. *Fig. 9 (1)*
▶ Undo the bolt a little with a T15 screwdriver. *Fig. 9 (2)*
▶ Hold the door and remove pins with your fingers. *Fig. 9 (3)*
▶ Pull the bearing bush out of the guide. Insert from the other side and click into place. *Fig. 9 (4)*
▶ Lift door and place to one side.
▶ Carefully lift the plugs out of the door bearing bush with a slotted screwdriver and remove. *Fig. 9 (5)*

4.3.2 Removing the lower door

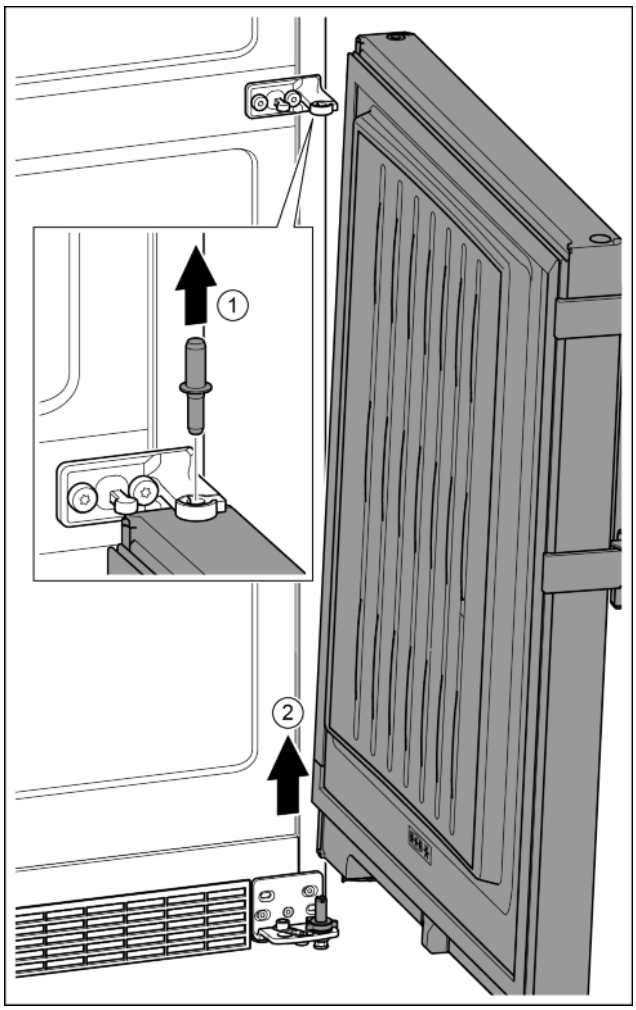

Fig. 10

CAUTION
Risk of injury if the door tips!
▶ Take good hold of the door.
▶ Set down the door carefully.

▶ Remove the bolts in an upward direction. *Fig. 10 (1)*
▶ Swivel the door out, pull it upwards and set it to one side. *Fig. 10 (2)*

4.3.3 Changing the upper storage parts

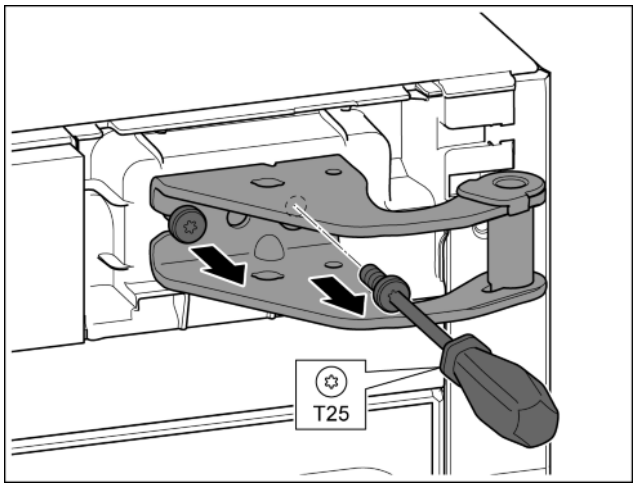

Fig. 11

▶ Remove both screws with the T25 screwdriver.
▶ Lift and remove the mounting block.

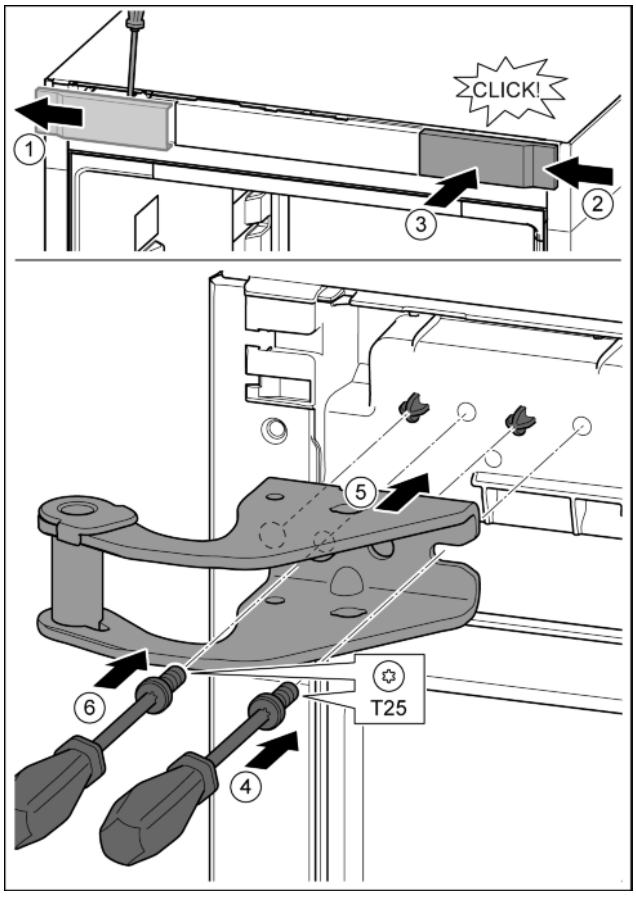

Fig. 12

▶ Undo the cover with a screwdriver and remove sideways. *Fig. 12 (1)*
▶ Rotate the cover 180° and clip onto the other side from the right. *Fig. 12 (2)*
▶ Click the cover into place. *Fig. 12 (3)*
▶ Position the screw with a T25 screwdriver. *Fig. 12 (4)*
▶ Position the upper bearing bracket. *Fig. 12 (5)*
▷ Place the pins in the screw holes provided.
▶ Tighten the screw. *Fig. 12 (4)*
▶ Insert the screw with a T25 screwdriver and tighten. *Fig. 12 (6)*

4.3.4 Changing the middle storage sections

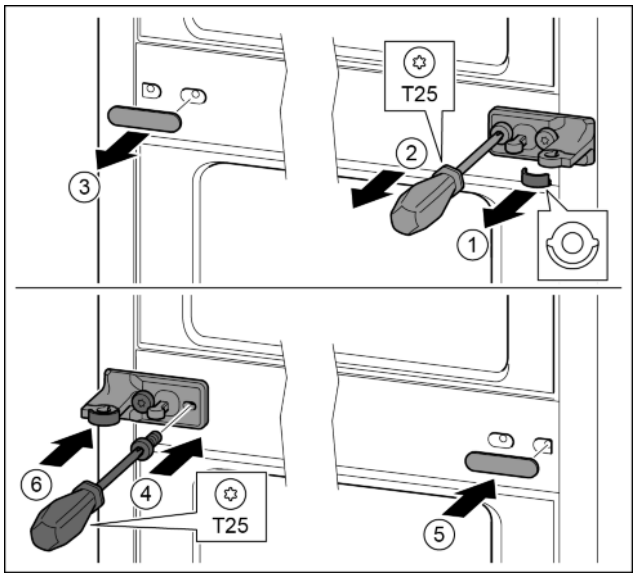

Fig. 13

▶ Remove the disc. *Fig. 13 (1)*
▶ Remove the screws with the T25 screwdriver. *Fig. 13 (2)*
▶ Remove the cover carefully. *Fig. 13 (3)*
▶ Screw the bearing bracket and the film rotated 180° firmly onto the other side. *Fig. 13 (4)*
▶ Attach the cover rotated 180° onto the other side. *Fig. 13 (5)*
▶ Push the disc in from the front. *Fig. 13 (6)*

4.3.5 Changing the lower storage parts

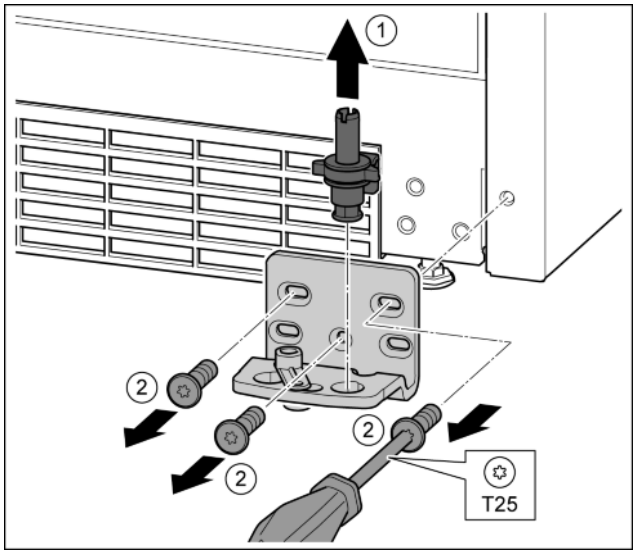

Fig. 14

▶ Lift the bearing bolts upwards and remove. *Fig. 14 (1)*
▶ Remove the screws with the T25 screwdriver and remove the bearing bracket. *Fig. 14 (2)*

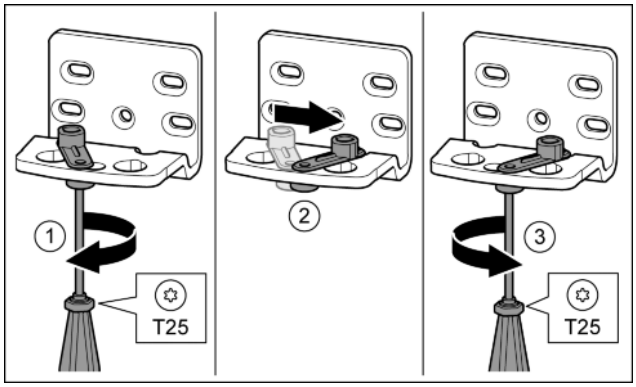

Fig. 15

- ▶ Loosen screw using a T25 screwdriver. *Fig. 15 (1)*
- ▶ Lift the door closure aid and turn it 90° to the right in the hole. *Fig. 15 (2)*
- ▶ Tighten screw using a T25 screwdriver. *Fig. 15 (3)*

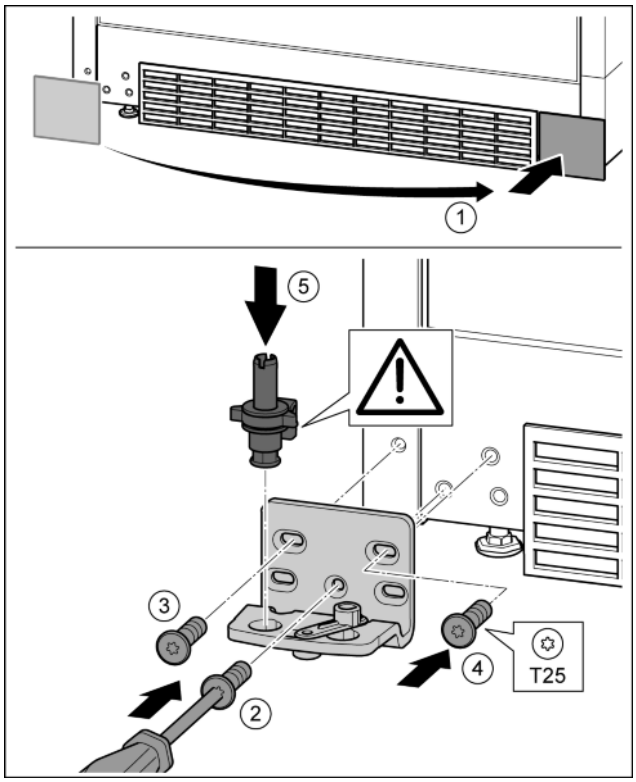

Fig. 16

- ▶ Remove the cover and fix onto the other side. *Fig. 16 (1)*
- ▶ Place the bearing bracket on the other side and screw in with the T25 screwdriver. Start with screw 2 at the bottom in the middle. *Fig. 16 (2)*
- ▶ Screw in screws 3 and 4. *Fig. 16 (3, 4)*
- ▶ Insert the bearing bolts completely. Ensure here that the catch mechanism points backwards. *Fig. 16 (5)*

4.3.6 Changing door on storage parts

Bottom door

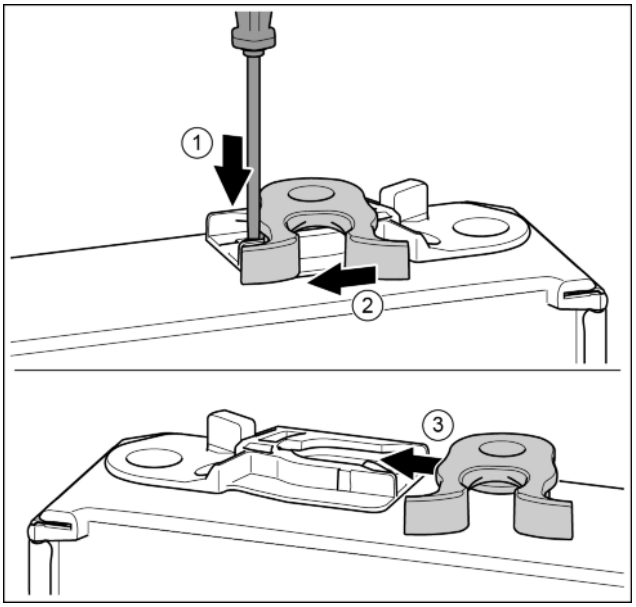

Fig. 17

- ▶ Underside of door faces upwards: Turn the door.
- ▶ Push the lug downwards with a slotted screwdriver. *Fig. 17 (1)*
- ▶ Pull the door latch out of the guide. *Fig. 17 (2)*
- ▶ Push the door latch into the guide on the other side. *Fig. 17 (3)*
- ▶ Upper side of door faces upwards: Turn the door.

Door at top

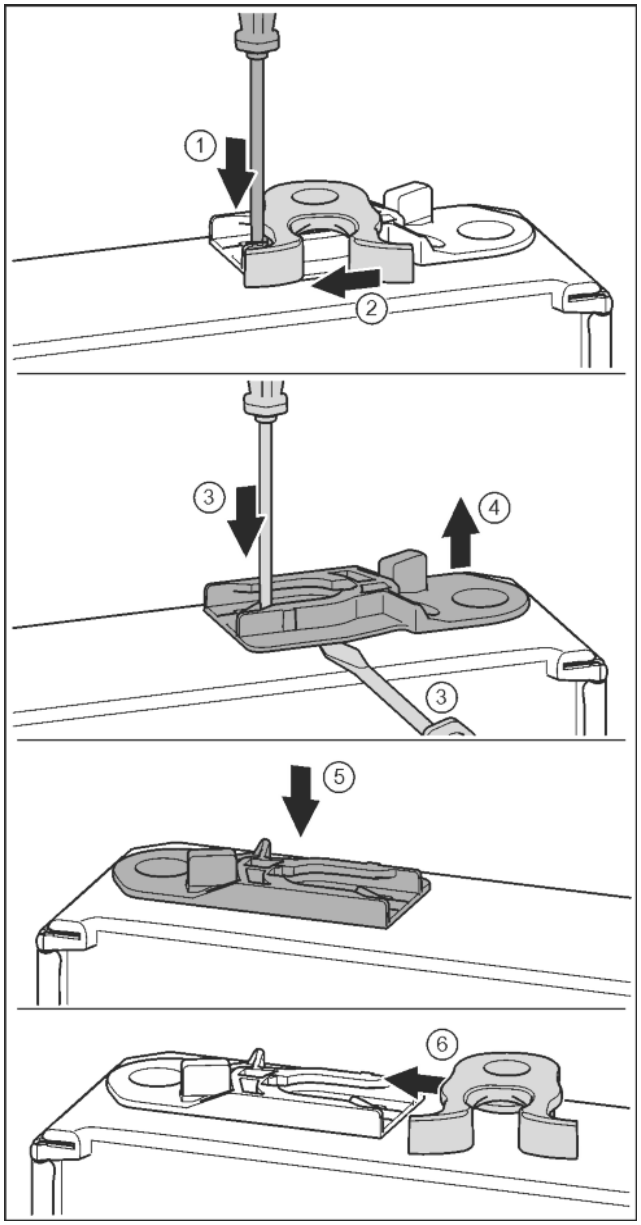

Fig. 18

- ▶ Underside of door faces upwards: Turn the door.
- ▶ Push the lug downwards with a slotted screwdriver. *Fig. 18 (1)*
- ▶ Pull the door latch out of the guide. *Fig. 18 (2)*
- ▶ Remove the guide bush: Press tab with Phillips screwdriver and, at the same time, insert the Phillips screwdriver under the guide bush. *Fig. 18 (3, 4)*
- ▶ Slide guide sleeve enclosed in scope of supply onto other side of housing. *Fig. 18 (5)*
- ▶ Slide locking hook into guide. *Fig. 18 (6)*
- ▶ Upper side of door faces upwards: Turn the door.

4.3.7 Changing the handles

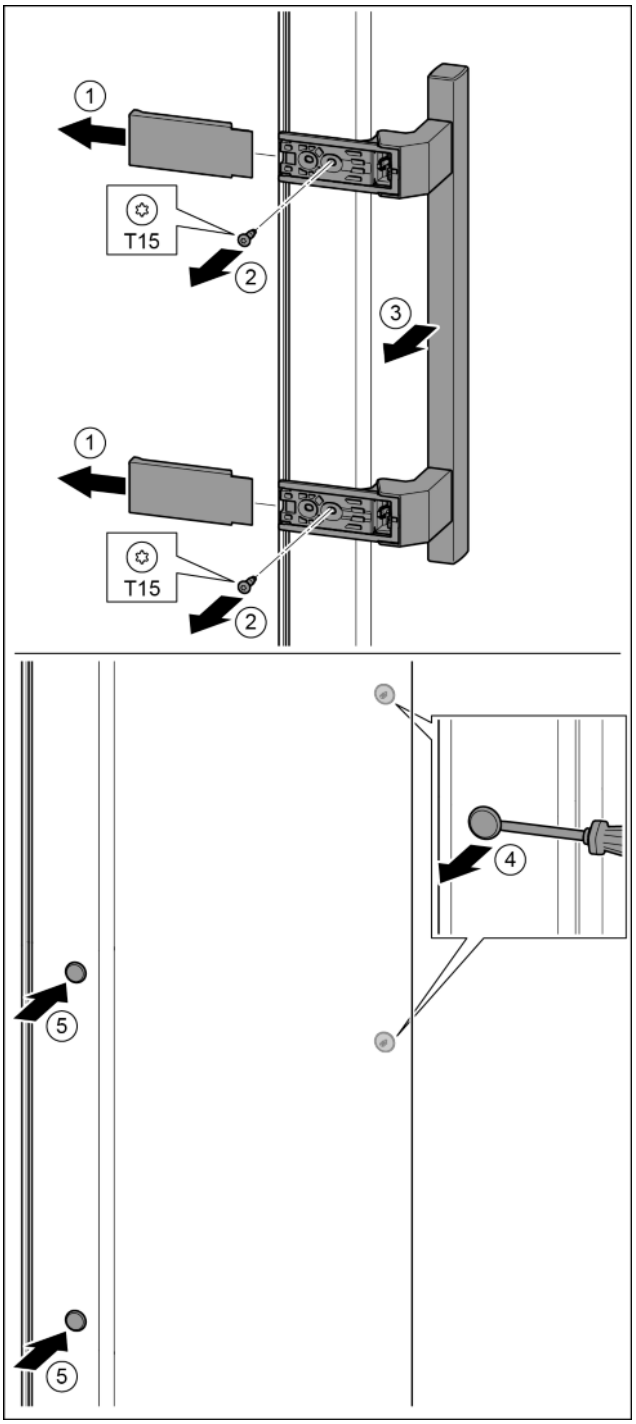

Fig. 19

- ▶ Remove the cover. *Fig. 19 (1)*
- ▶ Remove the screws with the T15 screwdriver. *Fig. 19 (2)*
- ▶ Remove the handle. *Fig. 19 (3)*
- ▶ Carefully lift up the plugs and remove them with a slotted screwdriver. *Fig. 19 (4)*
- ▶ Insert the plugs again on the other side. *Fig. 19 (5)*

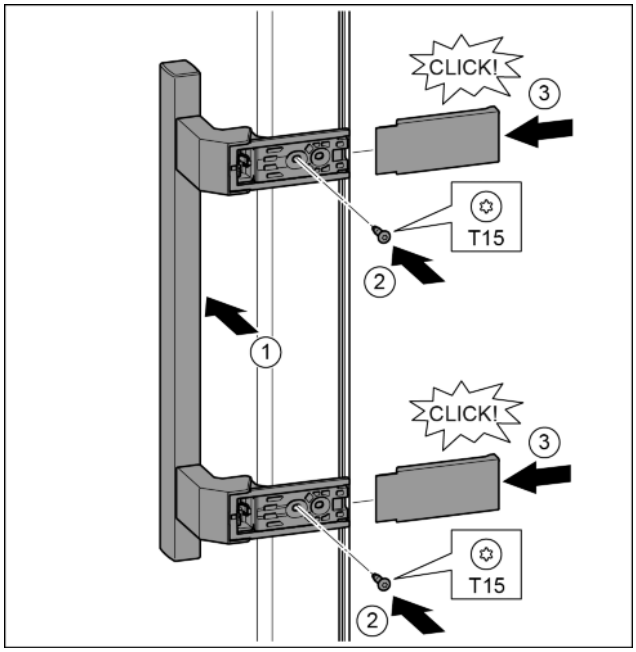

Fig. 20

▶ Position the handle on the other side. *Fig. 20 (1)*
▷ The screw holes must be exactly above each other.
▶ Tighten the screws with the T15 screwdriver. *Fig. 20 (2)*
▶ Position the covers on the side and push in. *Fig. 20 (3)*
▷ Ensure that it clicks into place.

4.3.8 Fitting the lower door

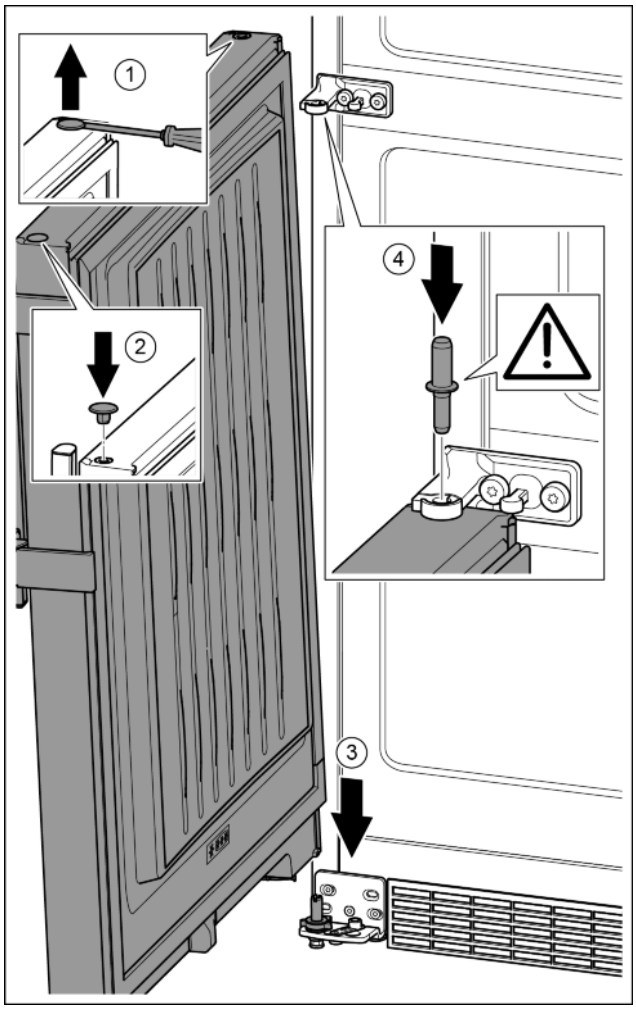

Fig. 21

▶ Carefully lift up the plugs and remove them with a slotted screwdriver. *Fig. 21 (1)*
▶ Insert the plugs again on the other side of the door. *Fig. 21 (2)*
▶ Position the door from above onto the lower bearing bolts. *Fig. 21 (3)*
▶ Insert the middle bearing bolt through the middle bearing bracket into the lower door. Ensure here that the catch mechanism points backwards. *Fig. 21 (4)*

4.3.9 Fit upper door

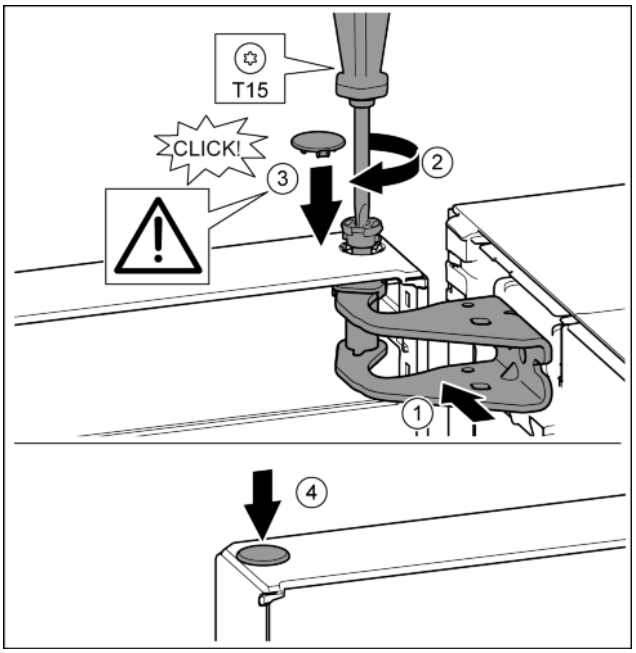

Fig. 22

▶ Place the upper door onto the middle bearing bolt.
▶ Align top of door with aperture in mounting block. *Fig. 22 (1)*
▶ Insert the bolt and tighten with a T15 screwdriver. *Fig. 22 (2)*
▶ Fit protective cover to protect the door: Install protective cover and check that it is attached to the door. If not, insert the bolt fully. *Fig. 22 (3)*
▶ Insert the plugs. *Fig. 22 (4)*

4.3.10 Aligning the doors

WARNING
Risk of injury due to the door dropping out!
If the bearing parts are not screwed into place firmly enough, the door may drop out. This may lead to severe injuries. What is more, the door may not close and therefore the appliance may fail to cool properly.
▶ Screw the turn hinges firmly into place with 4 Nm.
▶ Check all of the screws and retighten if necessary.

▶ If necessary align the door over the two slotted holes in the bottom bearing bracket and the middle bearing bracket so that it is flush with the appliance housing. To do this undo the middle screw in the bottom bearing bracket with the T25 tool supplied. Undo the remaining screws a little with the T25 tool or with a T25 screwdriver and align over the slotted holes. Undo the screws in the middle bearing bracket with the T25 tool and align the middle bearing bracket over the slotted holes.
▶ Support the door: Use saddle wrench SW10 to unscrew and remove the base on the mounting block until it makes contact with the ground, then continue turning it for a further 90°.

4.3.11 Fit the covers

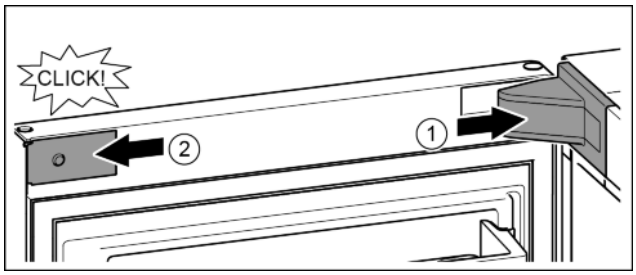

Fig. 23

The door is open 90°.

▶ Position the cover and click into place, if necessary, push apart carefully. *Fig. 23 (1)*

▶ Position the cover on the side and click into place. *Fig. 23 (2)*

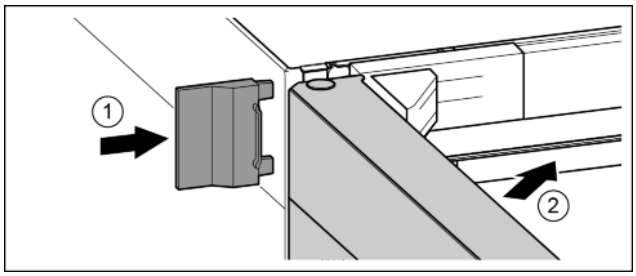

Fig. 24

▶ Push the external cover on. *Fig. 24 (1)*

▶ Close the upper door. *Fig. 24 (2)*

4.4 Insertion into a row of kitchen units

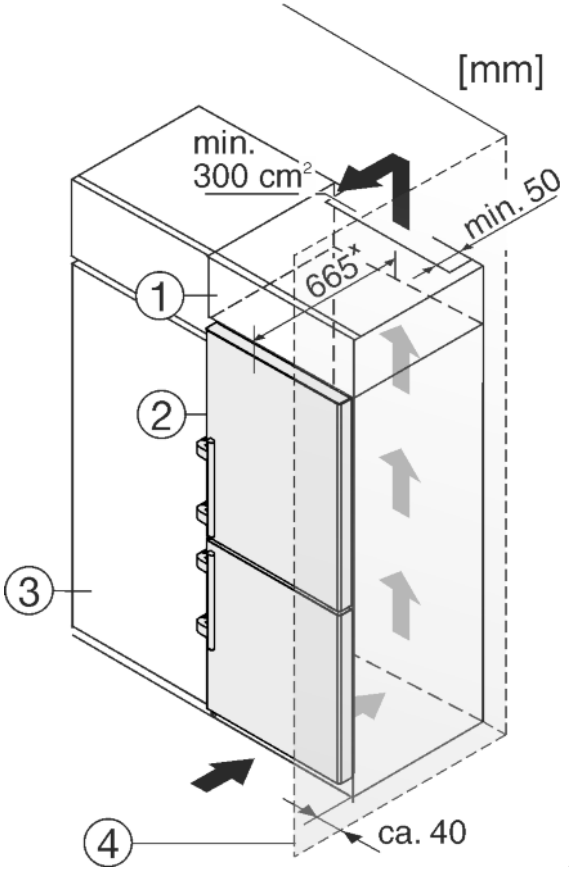

Fig. 25

(1) Stack cabinet
(2) Appliance
(3) Kitchen cabinet
(4) Wall

x If wall spacers are used, the dimensions increase by 15 mm (see 4.2) .

The appliance can be inserted into a row of kitchen units. To match the appliance *Fig. 25 (2)* to the height of the row of units, a suitable stack cabinet *Fig. 25 (1)* can be fitted above the appliance.

When retrofitting with kitchen cabinets the appliance can be installed directly next to the cabinet *Fig. 25 (3)*. So that the doors can be opened fully the appliance must be stick out at least 65 mmx from the front of the cabinet. The appliance may protrude further depending on the depth of the kitchen cabinets and if wall spacers are used.

NOTICE
Danger of overheating due to insufficient air ventilation!
The compressor may be damaged if there is insufficient air ventilation.
▶ Take care to ensure adequate air ventilation.
▶ Observe the ventilation requirements.

Ventilation requirements:

- Spacer ribs on the back of the appliance provide sufficient air ventilation. In the final appliance position, these must not be placed in recesses or cut-outs.
- At the back of the stack cabinet there has to be a ventilation duct of at least 50 mm depth throughout the width of the stack cabinet.
- The cross section of the ventilation gap below the ceiling must be at least 300 cm².
- the larger the ventilation space, the more energy-saving the appliance is in operation.

If the appliance is installed with the hinges next to a wall *Fig. 25 (4)*, the distance between appliance and wall has to be at least 40 mm. This corresponds to the projection of the handle when the door is open.

4.5 Disposing of packaging

WARNING
Danger of suffocation due to packing material and plastic film!
▶ Do not allow children to play with packing material.

The packaging is made of recyclable materials:

- corrugated board/cardboard
- expanded polystyrene parts
- polythene bags and sheets
- polypropylene straps
- nailed wooden frame with polyethylene panel*

▶ Take the packaging material to an official collecting point.

4.6 Connecting the appliance

WARNING
Failure to connect properly
Fire.
▶ Do not use an extension cable.
▶ Do not use distributor blocks.

NOTICE
Failure to connect properly
Damage to the electronics.
▶ Do not use a standalone inverter.
▶ Do not use an energy saving plug.

Note
Only use the power connection lead supplied.
▶ A longer power connection lead can be ordered from Customer Service.

Ensure that the following conditions are met:
- The type of current and voltage at the installation site correspond to the information on the model plate (see Appliance at a glance).
- The socket is earthed according to the regulations and fused.
- The fuse tripping current is between 10 and 16 A.
- The socket is easily accessible.
- The socket is outside the back of the appliance area.

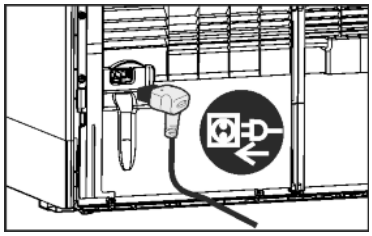

Fig. 26

▶ Check the electrical connection.
▶ Insert the appliance plug in the back of the appliance. Ensure that it clicks into place.
▶ Connect the power plug to the power supply.
▷ The Liebherr logo appears on the screen.
▷ The display switches to the standby symbol.

4.7 Switching on the appliance

Note
Demonstration mode is active: *DemoMode active!*, appears on the screen.
▶ Cancelling demo mode. (see Malfunction).

Note
The manufacturer recommends:
▶ Store frozen produce at -18 °C or colder.

Connect and switch on appliance approx. 2 hours before loading for the first time.

4.7.1 Switch on appliance

If the standby symbol is displayed over the whole screen:
▶ Press the standby symbol.
▷ The appliance is switched on. The display switches to the home screen.
▷ The appliance is set to the displayed temperatures. This is shown by down arrows.

If the standby symbol is displayed in the fridge compartment and the freezer compartment fields:
▶ Press the standby symbol in the freezer compartment field or the fridge compartment field.
▷ The appliance is switched on.
▷ The appliance is set to the displayed temperatures. This is shown by down arrows.

If the screen is black:
▶ Touch the screen.
▷ The standby symbol appears on the whole screen.
▶ Press the standby symbol.
▷ The appliance is switched on. The display switches to the home screen.
▷ The appliance is set to the displayed temperatures. This is shown by down arrows.

4.7.2 Switching the fridge compartment on

The standby symbol is displayed in the fridge compartment field.
▶ Press the standby symbol in the fridge compartment field.
▷ The fridge compartment is switched on.
▷ The fridge compartment is set to the displayed temperature. This is shown by down arrows.

4.8 Inserting the FreshAir filter.

The supplied FreshAir filter can be used for optimum air quality.
▶ Remove the fan cover.

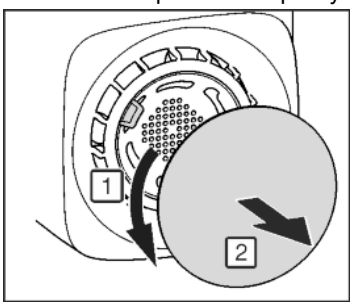

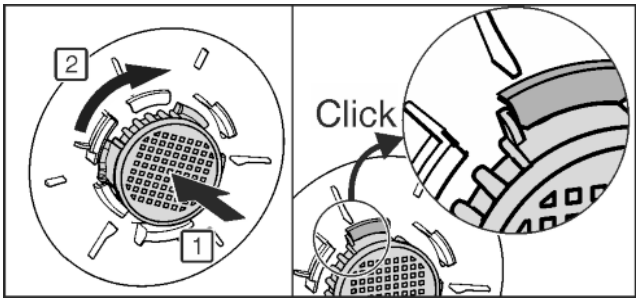

Fig. 27

▶ Place the FreshAir filter into the cover and turn to the right.
▶ Ensure that the filter clicks into place.
▶ Replace the fan cover again.

Setting the timer
▶ Press menu.
▶ Press the navigation arrows until the FreshAir filter is displayed.



▶ Press the FreshAir filter symbol.
▶ Press ON.
▷ The timer is set. After the interval has expired a message prompts you to change the FreshAir filter.

4.9 Setting the clean ventilation grid timer

The ventilation grid must be cleaned at least once a year for sufficient ventilation. The timer can be set as a reminder.
▶ Press menu.
▶ Press the navigation arrows until the ventilation grid is displayed.



▶ Press the ventilation grid symbol.
▶ Press ON.
▷ The timer is set. After the interval has expired a message prompts you to clean the ventilation grid.

5 Control

5.1 Changing the temperature unit

The temperature display can be switched from °C to °F.
▶ Press menu.
▶ Press the navigation arrow until °C is displayed.
▶ Press °F.
▷ The temperature is displayed in °F.

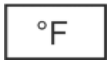

Switch from °F to °C in the same way.

5.2 Child proofing

The child-proofing function enables you to make sure that the appliance is not inadvertently switched off by playing children.



5.2.1 Switching on the child safety device

▶ Press menu.
▶ Press the navigation arrows until the child safety device is displayed.
▶ Press ON.
▷ The child safety device is switched on.

5.2.2 Switching the child safety device off

▶ Press menu.
▶ Press the navigation arrows until the child safety device is displayed.
▶ Press OFF.
▷ The child safety device is switched off.

5.3 Sabbath Mode

This function meets the religious requirements on the Sabbath or Jewish feast days. When Sabbath mode is on some of the electronic control functions are switched off. After setting Sabbath mode you no longer need to worry about indicator lamps, figures, symbols, displays, alarm messages and fans. The thawing cycle only works for the specified time without taking account of fridge use. After a power cut the appliance automatically switches back to Sabbath mode.

WARNING
Danger of food poisoning.
If a power cut occurs when Sabbath mode is enabled, this message is not saved. Once the power is restored the appliance continues to work in Sabbath mode. When this mode is over no message about the power cut is displayed on the temperature display.
If a power cut occurred during Sabbath mode:
▶ Check the food for quality. Do not eat the food if it has thawed.

- All functions are blocked until Sabbath mode is switched off.
- If functions such as SuperFrost, SuperCool, ventilation etc. are selected when Sabbath mode is switched on they remain switched on.
- No audible signals are emitted and the temperature display does not indicate any warnings or settings (such as a temperature alarm or door alarm).
- The internal light is off.

5.3.1 Switching SabbathMode on.

▶ Press menu.
▶ Press the navigation arrow until SabbathMode is displayed.
▶ Press ON.
▷ SabbathMode is switched on. Only the SabbathMode symbol appears on the screen.

SabbathMode switches off automatically after 120 hours if it has not already been switched off manually. The display switches to the home screen.

5.3.2 Switch off the SabbathMode

▶ Touch the screen.
▶ Press OFF.
▷ SabbathMode is switched off.

5.4 Refrigerator compartment

The natural circulation of air in the refrigerator compartment results in zones differing in temperature. It is coldest directly above the vegetable drawers and at the rear wall. It is warmest at the top front of the compartment and in the door.

5.4.1 Food refrigeration

Note
The energy consumption increases and the cooling performance decreases if the ventilation is inadequate.
▶ Always keep the air slits of the fan free.

▶ Store perishable food such as ready-to-serve dishes, meat products and sausages in the coldest zone. Place butter and preserves in the upper area and in the door (see Appliance at a glance).
▶ Use recyclable plastic, metal, aluminium and glass containers and cling film for wrapping.
▶ Always store liquids and food which is subject to odour or taste transfer in closed containers or cover them.
▶ Foods which give off a large amount of ethylene gas and delicate foods, such as fruit, vegetables, salad, should always be stored separately or wrapped so as not to reduce the storage life; e.g. do not store tomatoes together with kiwis or cabbage.
▶ Use the front area of the refrigerator compartment floor only for briefly putting down cooled products, e.g. when rearranging and sorting. However do not leave cooled products there otherwise they may be pushed back or tipped over when the door is closed.
▶ Do not store food too close together to enable good air circulation.

5.4.2 Setting the temperature

The temperature depends on the following factors:
- the frequency of opening the door
- the room temperature of the installation location
- the type, temperature and quantity of the food

The temperature can be set from 9 °C to 1 °C.

Recommended temperature setting: 5 °C
▶ Press the fridge compartment field.
▷ The following screen is displayed:

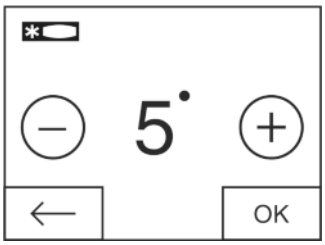

Fig. 28

Setting a higher temperature:
▶ Press plus.

Setting a lower temperature:
▶ Press minus.

The minus symbol is greyed out when the coldest temperature is selected.

The plus symbol is greyed out if it is pressed again after selecting the hottest temperature. The standby symbol is displayed on the screen.
▶ Confirm the required temperature with OK.
▷ The display switches to the home screen.
▷ The selected temperature is displayed.
▷ Up or down arrows indicate the change in temperature. The arrows are greyed out when the target temperature is reached.

5.4.3 SuperCool

With SuperCool you switch to the highest cooling performance to reach lower cooling temperatures. Use SuperCool, to rapidly cool large amounts of food.



When SuperCool is activated, the fan* may run. The appliance operates with maximum cooling performance, which means that the noise of the refrigeration unit may be temporarily louder.

The SuperCool function uses slightly more energy.

Switching on SuperCool

▶ Press menu.
▶ Press the navigation arrow until SuperCool is displayed.
▶ Press the SuperCool symbol.
▷ The following screen is displayed:

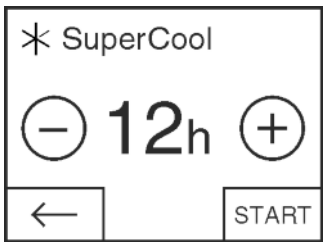

Fig. 29

The running time can be set to four levels.

Setting the running time:
▶ Press plus or minus.

The minus symbol is greyed out when the lowest level is selected.

The plus symbol is greyed out when the highest level is selected.

▶ Confirm the required running time with START.
▷ The display switches to the home screen.
▷ SuperCool is selected.
▷ The remaining running time and the SuperCool symbol are displayed in the fridge compartment field.
▷ The lowered temperature is shown by the down arrows.
▷ After the remaining running time has elapsed the appliance returns to normal mode. The temperature is set to the preset value again. Up arrows show the temperature increase.

Switching SuperCool off ahead of schedule

▶ Press menu.
▶ Press the navigation arrow until SuperCool and the remaining running time are displayed.
▶ Press on the remaining running time.
▶ Press STOP.
▷ SuperCool is switched off.
▷ The temperature is set to the preset value again. Up arrows show the temperature increase.

5.4.4 Fan

With the fan you can rapidly cool large quantities of fresh food or achieve a relatively even distribution of temperature across all the storage levels.

The forced-air cooling is to be recommended:

- at high room temperature (above33 °C)
- at high humidity

The forced-air cooling uses slightly more energy. To save energy, the fan switches off automatically when the door is open.

Switching on the fan

▶ Press menu.
▶ Press the navigation arrows until the fan is displayed.
▶ Press ON.
▷ The fan is switched on.

To switch off the fan

▶ Press menu.
▶ Press the navigation arrows until the fan is displayed.
▶ Press OFF.
▷ The fan is switched off.

5.4.5 Shelves

Moving or removing shelves

The shelves have stops preventing them from being unintentionally pulled out.

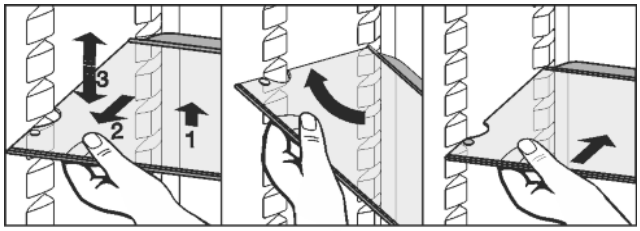

Fig. 30

▶ Lift the shelf slightly and pull forward a little.
▶ Adjust the height of the shelf. To do so, push the cut-outs along the supports.
▶ In order to remove the shelf fully, place it at a slant and pull out towards the front.
▶ Insert shelf with the raised edge pointing upwards at the back.
▷ The food does not freeze onto the rear wall.

Do not store any goods on the humidity regulation plate of the bottom shelf.

Dismantling shelves

▶ The shelves can be dismantled for cleaning.

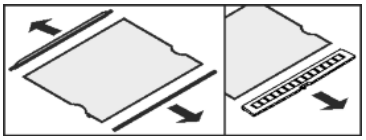

5.4.6 Using the sectioned shelf

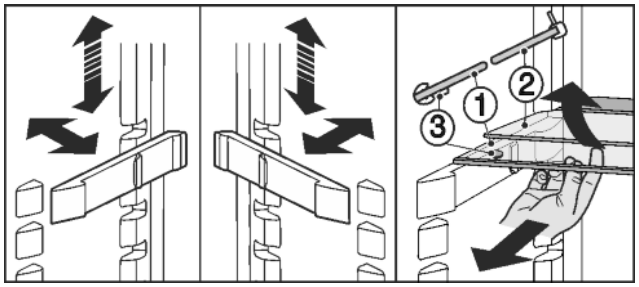

Fig. 31

Adjusting the height:
▶ Pull the glass plates out forwards one by one.
▶ Remove the support from the catch mechanism and click into place at the required height.

Using both shelves:
▶ Lift the top glass plate and pull the bottom glass plate forwards.
▷ The glass plate (1) with the pull out stops must be at the front so that the stops (3) point downward.

* Depending on model and options

5.4.7 Door racks

Moving the storage rack

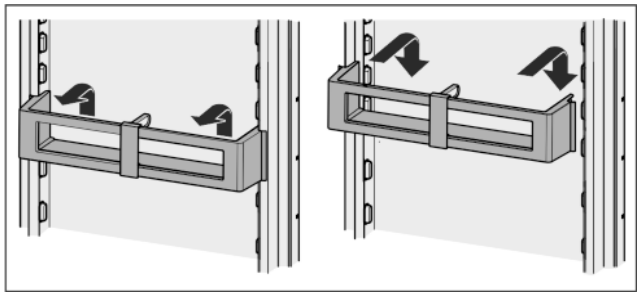

Fig. 32

Dismantling door racks

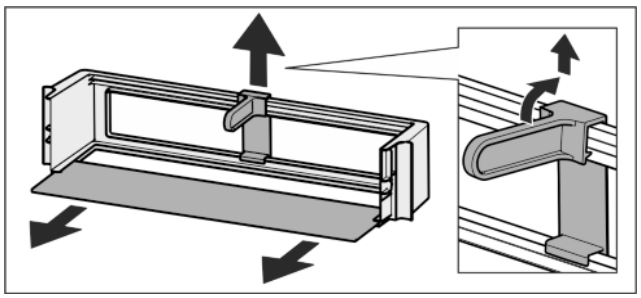

Fig. 33

▶ The door racks can be dismantled for cleaning.

5.4.8 Using the bottle holder

▶ To avoid the bottles tipping over, push the bottle holder along.

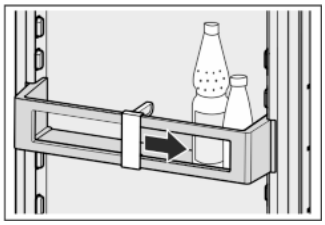

5.4.9 BioCool boxes.

Controlling humidity

▶ Low humidity: Move the slide control to the left.

▶ High humidity: Move the slide control to the right.

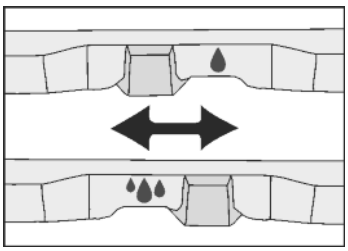

Removing theBioCool box

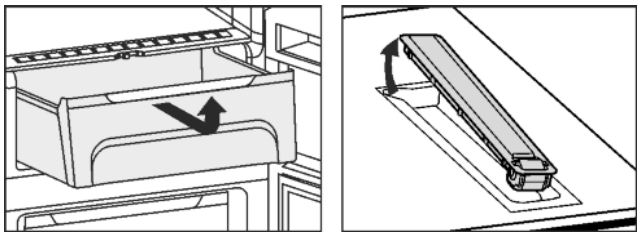

Fig. 34

▶ BioCool boxes and roller plates can be removed for cleaning.

5.5 Freezer compartment

You can store frozen food, make ice cubes and freeze fresh food in the freezer compartment.

EN

5.5.1 Freezing food

The rating plate indicates the maximum quantity of fresh food you can freeze within 24 hours (see Appliance at a glance) under “Freezing capacity ... kg/24h”.

The maximum load of frozen food for the drawers is 25 kg each and for the shelves 35 kg each.

A vacuum is generated after the door is closed. After closing the door, wait for about 1 minute and then it opens more easily.

CAUTION

Risk of injury due to broken glass!

Bottles and cans containing drinks may burst when being frozen. This applies particularly to sparkling drinks.

▶ Do not freeze bottles and cans containing drinks!

In order that the food is rapidly frozen through to the core, do not exceed the following quantities per pack:

- Fruit, vegetables up to 1 kg
- Meat up to 2.5 kg

▶ Pack the food in portions in freezer bags, reusable plastic, metal or aluminium containers.

5.5.2 Storage life

Standard values for the storage life of various types of food in the freezer compartment:	
Ice-cream	2 to 6 months
Sausage, ham	2 to 6 months
Bread, bakery products	2 to 6 months
Game, pork	6 to 10 months
Fatty fish	2 to 6 months
Lean fish	6 to 12 months
Cheese	2 to 6 months
Poultry, beef	6 to 12 months
Vegetables, fruit	6 to 12 months

The values indicated for storage life are standard ones.

5.5.3 Thawing food

- in the refrigerator compartment
- in a microwave oven
- in a conventional or fan oven
- at room temperature

▶ Remove only as much food as is required. Use thawed food as quickly as possible.

▶ Food once thawed should be re-frozen only in exceptional cases.

5.5.4 Setting the temperature

The temperature depends on the following factors:

- the amount of times the door is opened
- the room temperature of the installation site
- the type, temperature and amount of food

The temperature can be set from -26 °C to -15 °C.

Recommended temperature setting: -18 °C

▶ Press the freezer compartment field.

▷ The following screen is displayed:

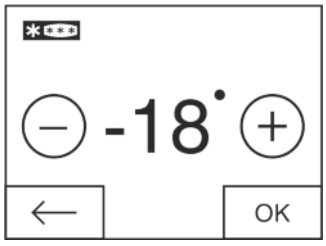

Fig. 35

Setting a higher temperature:
▶ Press plus.

Setting a lower temperature:
▶ Press minus.

The minus symbol is greyed out when the coldest temperature is selected.

The plus symbol is greyed out if it is pressed again after selecting the hottest temperature. The standby symbol is displayed on the screen.
▶ Confirm the required temperature with OK.
▷ The display switches to the home screen.
▷ The selected temperature is displayed.
▷ Up or down arrows indicate the change in temperature. The arrows are greyed out when the target temperature is reached.

5.5.5 SuperFrost

With this function you can freeze fresh food quickly through to the core. The appliance operates with maximum refrigeration. The noise of the refrigeration unit may be temporarily louder as a result.

In addition, frozen food already in storage is given a “cold reserve”. The food stays frozen longer as a result when you defrost the appliance.*

The maximum amount of fresh food which can be frozen in 24 h is indicated on the type plate under “freezing capacity ... kg/24h”. This amount varies according to the model and climate rating.

You have to activate SuperFrost in good time, depending on how much fresh food is to be frozen: about 6 hours before placing the food inside in case of small amounts and about 24 hours in advance in case of the maximum amount of food to be frozen.

Wrap produce and spread it out as far as possible. Do not allow produce to be frozen to touch produce that is already frozen to prevent the latter thawing.

You do not have to activate SuperFrost in the following cases:
- when placing frozen food in the freezer
- when freezing up to approx. 1 kg fresh food daily

Switching SuperFrost on.

▶ Press menu.
▶ Press the navigation arrow until SuperFrost is displayed.
▶ Press ON.
▷ SuperFrost is switched on.
▷ The freezer temperature goes down and the appliance works at maximum cooling capacity.
If there is a small amount of frozen food:
▶ wait about 6 hours.
▶ Appliance with NoFrost: Put packaged food into the top drawers.
▶ Appliance without NoFrost: Put packaged food into the bottom drawers.
With the maximum amount of frozen food (see model plate):
▶ wait about 24 hours.
▶ Appliance with NoFrost: Remove the top drawers and place the food directly on the top shelves.
▶ Appliance without NoFrost: Remove the bottom drawer and place the food directly in the appliance so that it is in contact with the floor or side walls.
▷ SuperFrost switches off automatically after about 65 hours.
▷ The SuperFrost symbol is greyed out.
▶ Put the food in the drawers and close them again.
▷ The appliance works in normal mode again.

Switching off SuperFrost

▶ Press menu.
▶ Press the navigation arrow until SuperFrost is displayed.
▶ Press OFF.
▷ SuperFrost is switched off.

5.5.6 Drawers

Note
The energy consumption increases and the cooling performance reduces if the air ventilation is insufficient.
▶ Ensure that the air slits of the fan on the rear wall are always kept free!

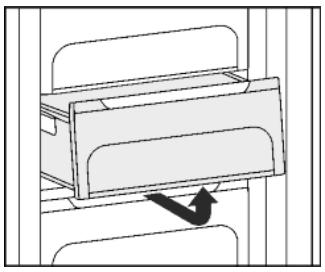

▶ To store frozen food directly on the shelves: pull the drawer forwards and lift it out.

5.5.7 Shelves

▶ To remove the shelf: lift up at the front and pull out.
▶ To put the shelf back: simply push in as far as it will go.

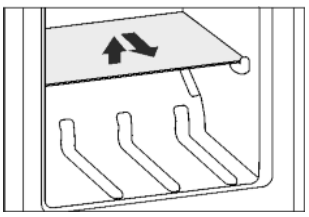

5.5.8 VarioSpace

Apart from being able to remove the drawers, you can also remove the shelves, creating space for large items of frozen food. Poultry, meat, large pieces of game and high bakery products can be frozen in one piece and prepared.
▶ The maximum load of frozen food for the drawers is 25 kg each and for the shelves 35 kg each.

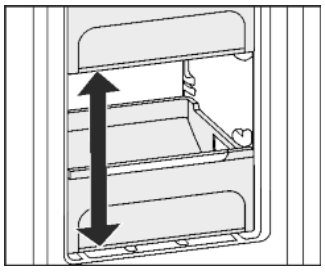

6 Maintenance

6.1 Change the FreshAir filter.

The FreshAir filter guarantees optimum air quality. It should be changed every 12 months. When the timer is set a message on the display prompts you to change it. The FreshAir filter can be ordered from the specialist dealer.
Change FreshAir filter is displayed.
▶ Press the change FreshAir filter symbol

▷ The display switches to the home screen.

The message can be displayed again by pressing on the menu field until the filter has been changed and confirmed. (see 8) .

▶ Remove the fan cover.

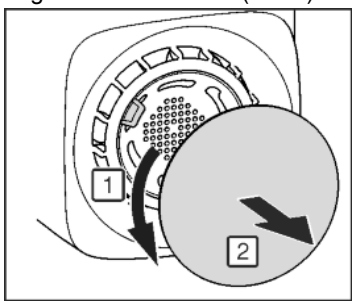

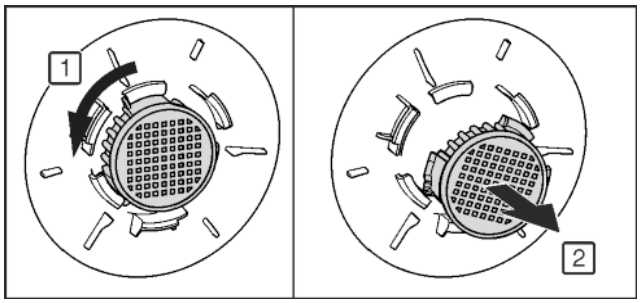

Fig. 36

▶ Remove the FreshAir filter.
▶ Insert the new filter in the reverse order.
▶ Ensure that the filter clicks into place.
▶ Replace the fan cover again.

Confirming the filter change

▶ Press menu.
▶ Press the navigation arrows until the FreshAir filter is displayed.
▶ Press the FreshAir filter symbol.
▶ Press the navigation arrows until change FreshAir filter is displayed.
▶ Press RESET.
▷ The timer is reset. The change interval starts all over again.

Turning the timer off

If a new FreshAir filter is not inserted the timer can be turned off

▶ Press menu.
▶ Press the navigation arrows until the FreshAir filter is displayed.
▶ Press the FreshAir filter symbol.
▶ Press OFF.
▷ The timer is turned off.

6.2 Defrosting with NoFrost*

The NoFrost system automatically defrosts the appliance.

Refrigerator compartment:

The defrost water evaporates due to the compressor heat. Drops of water on the rear wall are perfectly normal.

▶ Regularly clean the drain opening to allow the water to flow away (see 6.5) .

Freezer compartment:

The moisture condenses on the evaporator, is periodically defrosted and evaporates.

▶ The appliance does not have to be manually defrosted.

6.3 Manual defrosting*

Fridge compartment:

The **refrigerator compartment** is defrosted automatically. The defrost water evaporates as a result of the heat of the compressor. Drops of water on the rear wall are perfectly normal.

▶ Regularly clean the drain opening to allow the water to flow away (see 6.5) .

Freezer compartment:

A layer of frost or ice can build up in the **freezer compartment** after a long period of operation.

The layer of frost or ice builds up faster if the appliance is opened often or if the food is warm when placed inside. However, a thick layer of ice will increase the appliance's energy consumption. You should therefore defrost the appliance regularly.

CAUTION

Risk of injury and damage as a result of hot steam!

▶ Do not use electric heaters or steam cleaners, naked flames or defrosting sprays for defrosting.
▶ Do not remove ice using sharp instruments.

▶ Switch on SuperFrost one day before defrosting.
▷ The frozen goods are provided with a "cold reserve".
▶ Switch off the appliance.
▶ Pull out the power plug or switch off the fuse.
▶ If possible, put the frozen goods in the freezer drawer, wrapped in newspaper or a blanket, and store in a cool place.
▶ Place a pan with hot, not boiling water on a middle shelf.

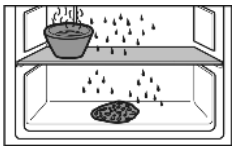

▷ Defrosting is speeded up.
▷ Defrost water is collected in the drawers.
▶ Leave the door of the appliance open while defrosting.
▶ Remove detached pieces of ice.
▶ If necessary, pick up defrost water several times, using a sponge or cloth.
▶ Clean the appliance (see 6.5) .

6.4 Cleaning the ventilation grid

The ventilation grid ensures that the appliance works properly due to optimum aeration and ventilation.

▶ Clean the ventilation grid regularly with a vacuum cleaner.
▶ Remove stubborn stains with a soft cloth.

When the timer is set a message on the display prompts you to clean it. The clean ventilation grid symbol appears on the screen.

▶ Press the clean ventilation grid symbol.
▷ The display switches to the home screen.

The message can be displayed again by pressing the menu field until it has been cleaned and this has been confirmed. (see 8) .

Confirming that the ventilation grid has been cleaned

▶ Press menu.
▶ Press the navigation arrows until the ventilation grid is displayed.
▶ Press the ventilation grid symbol.
▶ Press the navigation arrows until clean ventilation grid is displayed.
▶ Press RESET.
▷ The timer is reset. The cleaning interval starts all over again.

Turning the timer off

If the reminder function is to be switched off the timer can be turned off.

▶ Press menu.
▶ Press the navigation arrows until the ventilation grid is displayed.

▶ Press the ventilation grid symbol.
▶ Press OFF.
▷ The timer is turned off.

6.5 Cleaning the appliance

WARNING
Risk of injury and damage as a result of hot steam!
Hot steam can lead to burns and can damage the surfaces.
▶ Do not use any steam cleaners!

NOTICE
Incorrect cleaning damages the appliance!
▶ Do not use cleaning agents in concentrated form.
▶ Do not use any scouring or abrasive sponges or steel wool.
▶ Do not use any sharp or abrasive cleaning agents, nor any that contain sand, chloride or acid.
▶ Do not use chemical solvents.
▶ Do not damage or remove the type plate on the inside of the appliance. It is important for the customer service.
▶ Do not pull off, bend or damage cables or other components.
▶ Do not allow any cleaning water to enter the drain channel, ventilation grille or electrical parts.
▶ Please use soft cleaning cloths and a universal pH-neutral cleaning agent.
▶ Please use cleaning and care products suitable for contact with foodstuffs in the appliance interior.

▶ **Empty appliance.**
▶ **Pull out the power plug.**



▶ Clean **plastic outer and inner surfaces** with lukewarm water and a little washing-up liquid.

NOTICE
Risk of damage from stainless steel care products!
The **stainless steel doors** and **stainless steel side panels** are treated with a premium surface finish.
Stainless steel care products attack these surfaces.



▶ Only use a soft, clean cloth to wipe down **finished door and side panel surfaces** and **painted door and side panel surfaces**. To remove heavy dirt, use a little water or neutral detergent. Alternatively, you can use a micro-fibre cloth.

Do not treat the lettering on the painted door surfaces with harsh, abrasive agents. Wipe off any dirt with a soft cloth and some water or neutral cleaner.*

▶ Clean **drain hole**: Remove deposits with a narrow instrument, e.g. a cotton bud.

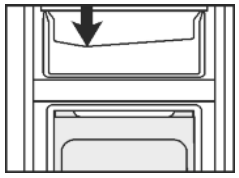

▶ Most of the **parts** can be dismantled for cleaning: see the relevant chapter.
▶ **Clean drawers** by hand with lukewarm water and a little washing up liquid.
▶ All the **other fittings** can be put in the dishwasher.
▶ **Vegetable bin roller bases** can also be cleaned in the dishwasher.

After cleaning:
▶ Wipe dry the appliance and items of equipment.
▶ Connect the appliance and switch it on again.
▶ Switch on SuperFrost (see 5.5.5) .
When the temperature is sufficiently cold:
▶ Put the food back inside.

6.6 Customer service

First of all check whether you can eliminate the fault yourself (see Malfunction). If you can't, contact Customer Services. You can find the address in the enclosed customer service list.

WARNING
Risk of injury if repair work is not carried out professionally!
▶ Have any repairs and action - not expressly specified - on the appliance and mains cable carried out by service personnel only. (see Maintenance)

Displaying the appliance description (model and index), service no. (service) and serial no. (S. no.) on the screen:
▶ Press menu.
▶ Press the navigation arrows until the appliance information symbol is displayed.

▶ Press the appliance information symbol.
▷ The appliance information is displayed.
▶ Note down the appliance information.
▶ To return to the home screen press the Back symbol.



▶ Close the door.
▶ Contact customer service and give them the required appliance information.
▷ This will help us to provide you with a faster, more accurate service.
▶ Follow any further instructions given by Customer Services.

Alternatively you can read off the appliance information from the model plate:
▶ Read off the appliance name *Fig. 37 (1)*, service no. *Fig. 37 (2)* and serial no. *Fig. 37 (3)* from the model plate. The model plate can be found on the inside of the appliance on the left.

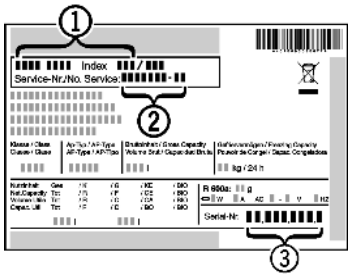

Fig. 37

7 Malfunctions

Your appliance is designed and manufactured for a long life span and reliable operation. If a malfunction nonetheless occurs during operation, check whether it is due to a handling error. In this case you will have to be charged for the costs incurred, even during the warranty period. You may be able to rectify the following faults yourself:

Appliance does not work.
→ The appliance is not switched on.
▶ Switch on the appliance.
→ The power plug is not properly inserted in the wall socket.
▶ Check power plug.
→ The fuse of the wall socket is not in order.
▶ Check fuse.

* Depending on model and options

→ The appliance plug does not fit the appliance properly.
▶ Check the appliance plug.

The compressor runs for a long time.
→ The compressor switches to a low speed when little cold is needed. Although the running time is increased as a result, energy is saved.
▶ This is normal in energy-saving models.
→ SuperFrost is activated.
▶ The compressor runs for longer in order to rapidly cool the food. This is normal.

Excessive noise.
→ Due to the various speed steps, speed-regulated* compressors can generate different running noises.
▶ The sound is normal.

A bubbling and gurgling noise.
→ This noise comes from the refrigerant flowing in the refrigeration circuit.
▶ The sound is normal.

A quiet clicking noise.
→ The noise is produced whenever the refrigeration unit (motor) automatically switches on or off.
▶ The sound is normal.

A hum. It is briefly a little louder when the refrigeration unit (the motor) switches on.
→ The refrigeration increases automatically when the SuperFrost, function is activated, fresh food has just been placed in the appliance or the door has been left open for a while.
▶ The sound is normal.
→ The refrigeration increases automatically when the SuperCool function is activated, fresh food has just been placed in the appliance or the door has been left open for a while.
▶ The sound is normal.
→ The ambient temperature is too high.
▶ Solution: (see 1.2)

A low hum.
→ The sound is produced by air flow noise of the fan.
▶ The sound is normal.

Vibratory noise.
→ The appliance is not fixed to the ground. The running of the cooling unit therefore makes objects and adjacent furniture vibrate.
▶ Adjust appliance via the height-adjustable feet.
▶ Move bottles and containers apart.

The DEMO symbol appears on the screen. In addition some time elapses.
→ DEMO mode is activated.
▶ Press STOP.

DEMO is displayed in the top right corner of the screen.
→ DEMO mode is activated.
▶ Unplug the appliance.
▶ Plug the appliance in again.
▷ The DEMO symbol appears on the screen. In addition some time elapses.
▶ Press STOP.

The outer surfaces of the appliance are warm*.
→ The heat of the refrigeration circuit is used to prevent condensate from forming.
▶ This is normal.

The temperature is not cold enough.
→ The door of the appliance is not properly closed.
▶ Close the door of the appliance.
→ Insufficient ventilation.
▶ Keep ventilation grille clear, and clean it.
→ The ambient temperature is too high.
▶ Solution: (see 1.2) .
→ The appliance was opened too frequently or for too long.
▶ Wait to see whether the appliance reaches the required temperature by itself. If not, please contact the after sales service (see Maintenance).
→ Too much fresh food was placed inside without SuperFrost.
▶ Solution: (see 5.5.5)
→ The appliance is too close to a source of heat (stove, heater etc).
▶ Change the position of the appliance or the source of heat.

The internal light does not come on.
→ The appliance is not switched on.
▶ Switch on the appliance.
→ The door was open longer than 15 min.
▶ The interior light automatically switches off if the door has been open for about 15 min.
→ The LED illumination is defective or the cover is damaged:

WARNING
Risk of injury due to electric shock!
Live parts are located under the cover.
▶ Have the LED interior light changed or repaired only by the customer service or by specialized personnel trained for the purpose.

WARNING
Danger of injury by LED lamp!
The light intensity of the LED illumination corresponds to laser class 1/1M.
If the cover is defective:
▶ Do not look into the illumination with optical lenses from the immediate proximity. This can cause injury to the eyes.

The door seal is defective or needs to be replaced for another reason.
→ The door seal can be replaced. It can be replaced without the need for special tools.
▶ Contact Customer Service (see Maintenance):

The unit has iced up or condensation has formed.
→ The door seal may have also slipped out of its groove.
▶ Check to ensure that the door seal is seated properly in the groove.

8 Messages

Error messages and reminders are displayed by an audible signal and a message on the screen. The audible signal gets louder and louder when error messages appear. It only stops when the message is confirmed. Highest priority messages are displayed first if several occur at the same time. Each message must be cleared separately.

The message stays in the menu field as long as it is active or the fault is not eliminated.

Note
Details on the message can be displayed again via the menu field.
▶ Press menu.
▶ Press the message symbol.
▶ The display switches to the next message when you press one. After the last active message the display switches to the home screen.

Door alarm



An audible warning sounds if the door is open for longer than 60 seconds. The door alarm symbol appears on the display. The audible warning stops automatically when the door is closed.

The audible warning can be switched off when the door is open. The audible alarm is switched off while the door is open.

▶ Press the door alarm symbol.
▷ The door alarm stops.
▷ The display switches to the home screen.

Temperature alarm



An audible signal sounds if the temperature is not cold enough. The temperature alarm symbol appears on the display.

The temperature had risen too high during the last few hours or days. When the fault is eliminated the appliance continues to work at the last temperature setting.

The reason for too high a temperature may be:

- hot, fresh food was inserted
- too much warm room air flowed in when rearranging and removing food
- the power was cut off for a while
- the appliance is faulty

▶ Press the temperature alarm symbol.
▷ The audible signal stops. The warmest temperature reached during the malfunction is displayed on the screen.
▶ Press the screen or wait for 30 seconds.
▷ The display switches to the home screen. Arrows and the temperature alarm symbol appear in the relevant temperature field. In addition the messages symbol is displayed in the menu field.
▶ Check the food for quality. Do not consume spoiled food. Do not re-freeze defrosted food,
▷ The symbols are greyed out when the target temperature is reached.

If the alarm status persists or the temperature cannot be reset independently: (see Malfunction).

Power cut



An audible warning sounds. The power cut symbol appears on the display.

The temperature had risen too high over the last few hours or days due to a power cut or power interruption. When the power is restored the appliance continues to work at the last temperature setting. Activated reminders for changing the FreshAir filter and cleaning the ventilation grid are retained.

▶ Press the power cut symbol.
▷ The audible signal stops. The warmest temperature reached in the freezer compartment during the power cut is displayed on the screen.
▶ Press the screen or wait for 30 seconds.
▷ The display switches to the home screen. Arrows and the temperature alarm symbol appear in the relevant temperature field. In addition the messages symbol is displayed in the menu field.
▶ Check the food for quality. Do not consume spoiled food. Do not re-freeze defrosted food,
▷ The symbols are greyed out when the target temperature is reached.

Appliance faults



An audible warning sounds. The appliance fault symbol appears on the display with the relevant error code.

An appliance component indicates a fault.

▶ Note down the fault code.
▶ Press the appliance fault symbol.
▷ The audible signal stops. The display switches to the home screen.
▶ Contact Customer Services (see Maintenance).

If the fault related to a specific temperature zone, the appliance fault symbol is displayed instead of the temperature in the zone's temperature field.

Other messages



Change the FreshAir filter . (see Maintenance)



Cleaning the ventilation grid (see Maintenance)

9 Decommissioning

9.1 Switching the appliance off

Note
If the appliance or the freezer or fridge compartment cannot be switched off the child safety device has been switched on.
▶ Switch the child safety device off (see 5.2.2) .

9.1.1 Switch off the appliance from the menu

The whole appliance is switched off. The screen goes black.



▶ Press menu.
▶ Press the navigation arrows until the standby symbol is displayed.
▶ Press OK.
▷ The standby symbol flashes on the whole screen. The whole appliance is switched off.
▷ After 10 minutes the standby symbol goes out.

9.1.2 Switch off the appliance from the freezer compartment

The fridge compartment is automatically turned off when the freezer compartment is turned off. The screen remains on.

▶ Press the freezer compartment field.
▶ Press plus.
▷ The plus symbol is greyed out if it is pressed again after selecting the hottest temperature. The standby symbol is displayed on the screen.
▶ Press OK.
▷ The standby symbol is displayed in all temperature fields.
▷ The freezer and fridge compartments are switched off.

9.1.3 Switching the fridge compartment off

If necessary, the fridge compartment can be switched off separately.

▶ Press the fridge compartment field.
▶ Press plus.
▷ The plus symbol is greyed out if it is pressed again after selecting the hottest temperature. The standby symbol is displayed on the screen.
▶ Press OK.
▷ The standby symbol is displayed in the fridge compartment field.
▷ The fridge compartment is switched off.

9.2 Taking the appliance out of service

▶ Empty the appliance.
▶ Switch off the appliance (see Decommissioning).
▶ Remove mains connector.
▶ Remove appliance connector if required: Remove and move from left to right at the same time.



▶ Clean the appliance (see 6.5) .

▶ Leave the door open to prevent odour.

10 Disposing of the appliance

The appliance contains some reusable materials and should be disposed of properly - not simply with unsorted household refuse. Appliances which are no longer needed must be disposed of in a professional and appropriate way, in accordance with the current local regulations and laws.



When disposing of the appliance, ensure that the refrigeration circuit is not damaged to prevent uncontrolled escape of the refrigerant it contains (data on type plate) and oil.

▶ Disable the appliance.
▶ Pull out the plug.
▶ Cut through the connecting cable.

Liebherr Hausgeräte Ochsenhausen GmbH * Memminger Strasse 77-79 * D-88416 Ochsenhausen * * www.liebherr.com