PHILIPS

产品	：	飞利浦净化加湿器
型号	：	HU5930
额定电压	：	220V～
额定频率	：	50Hz
额定输入功率	：	11 W
生产日期	：	请见产品本体
产地	：	中国江苏苏州

飞利浦（中国）投资有限公司
上海市天目西路 218 号 1602-1605
全国顾客服务热线: 4008 800 008

本产品根据国标 GB4706.1-2005, GB4706.45-2008, GB4706.48-2009 制造

PHILIPS

产品	：	飞利浦净化加湿器
型号	：	HU5931
额定电压	：	220V～
额定频率	：	50Hz
额定输入功率	：	16 W
生产日期	：	请见产品本体
产地	：	中国江苏苏州

飞利浦（中国）投资有限公司
上海市天目西路 218 号 1602-1605
全国顾客服务热线: 4008 800 008

本产品根据国标 GB4706.1-2005, GB4706.45-2008, GB4706.48-2009 制造

出版日期：2015-08-24

© 2015 Koninklijke Philips N.V.

4241 210 81471

Always there to help you / 始终如一地为您提供帮助

Register your product and get support from
在以下网站上注册产品并获得支持
www.philips.com/welcome

HU5930
HU5931

有疑问？
请联系飞利浦



ZHS 用户手册 1

EN User manual 15

Read this user manual carefully before you use the appliance
Save it for future reference
使用前请仔细阅读本使用说明书
保留备用

PHILIPS

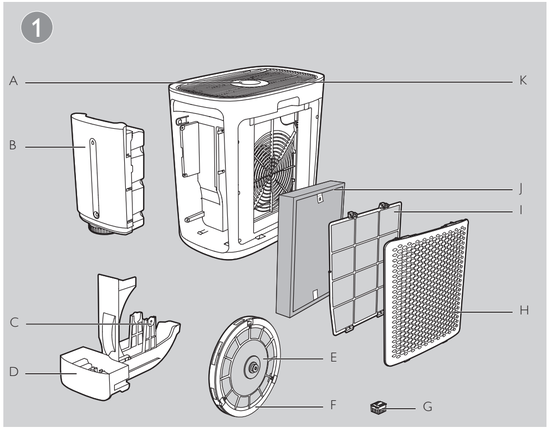

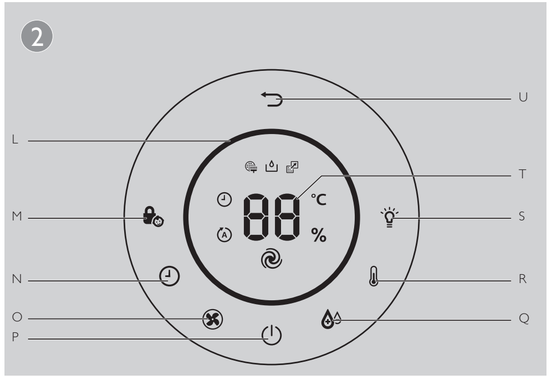

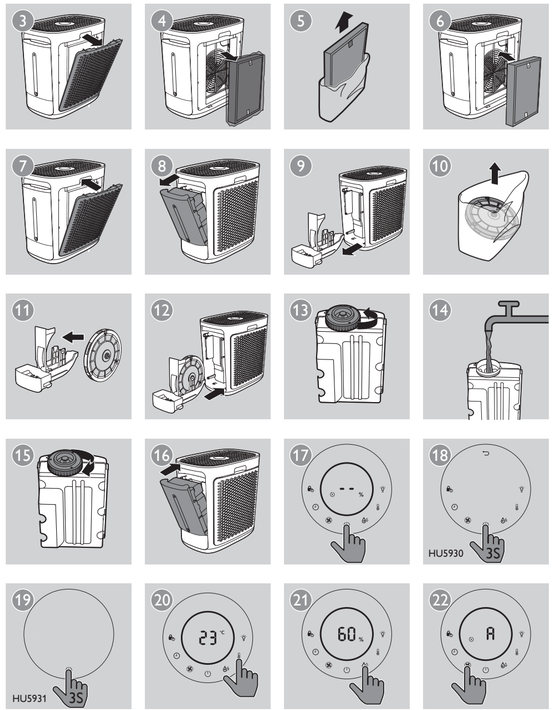

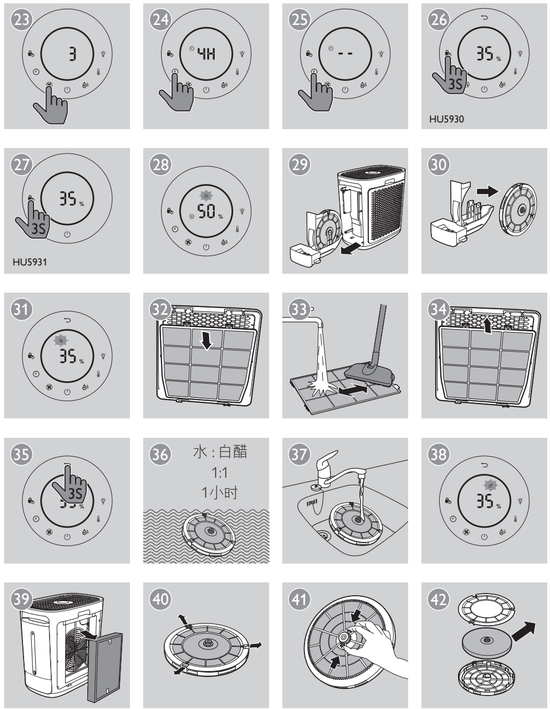

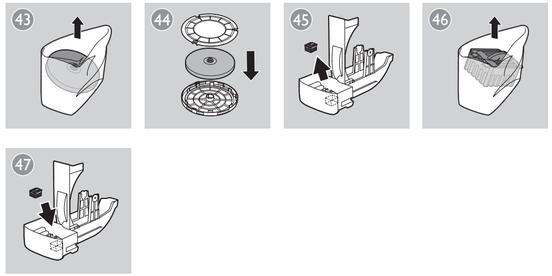

Service
Service
Service
GUARANTEE

PHILIPS

This guarantee card is valid in china
This guarantee card should be retained by
The USER
此保用卡在中国适用，用户请保留此卡。

Guarantee
产品保用卡

保修及服务：

此产品是一件设计精良，用高品质元件制造之家用电器，在正常使用及保养下应能发挥其优越性能。在购买日期后二年内，若发生任何因制造工艺或元器件造成之损坏，飞利浦中国维修服务中心将为持证用户提供免费门市维修服务，视情况更换零件或整个产品。

无论在保期中或保期后，只要飞利浦正式行销该产品的任何国家皆可获得维修服务。

若飞利浦在当地无行销该项产品，飞利浦同样提供维修服务，但可能因未储备所需零件，维修时间可能较长，敬请见谅。请联络当地飞利浦经销商，或飞利浦服务部门。

若您需洽询相关资讯，或遇困难事项时，请联络当地飞利浦维修服务中心，或向飞利浦服务热线咨询。

中国顾客服务热线：4008 800 008（用户需承担本地通话费）。

网址：http://www.philips.com.cn

保修条例：

- 在购买日期后二年内，凡经本公司特约维修站人员确认为正常使用情况下，因制造工艺或元器件造成之损坏，您都将获得免费保修服务。
- 此免费服务不包括需时常更换的易耗零配件（吸尘机纸袋，布袋，空气清新机滤网，滤芯，活性炭，咖啡壶过滤网）及附件（如须刀网膜、刀头，咖啡杯，食品加工机杯/刀具等），辅助装置，运输费及维修人员上门服务费。
- 用户请保留此联。
- 维修时请携同此证及发票正本。
- 此证若经涂改即作废。

以下情况将不能获得免费服务

1. 使用不当引起的人为损坏，例如接入不适当电源、使用不适当配件、不适当之安装、不依说明书使用、错误使用或疏忽而造成损坏等。因运输及其他意外而造成之损坏。非经本公司认可之维修和改装。其他因不可抗力（如自然灾害、电压异常等）造成的损坏。
2. 一般家庭以外使用（如工业、商业用）而造成的损坏。
3. 正常使用引起的产品老化、磨损等，但不影响产品的正常使用。

- 此证仅在中国境内有效。
- 保修证作为在规定期限及条件之内进行免费维修的保证，并不限制消费者的法定权利。

网上保修注册：

1) 登陆http://www.philips.com.cn/support
2) 在“其他支持”目录下找到“保修登记”，点击“保修登记”进入登记界面。
3) 点击“开始保修登记”。

服务须知：

SERVICE INFORMATION:

For after-sales and maintenance service, please call service hot line 4008 800 008.
Any comments and enquiries during the service, please contact our Philips Consumer Lifestyle Customer Care Service Office.

如需要此产品的售后服务，请拨打服务热线4008 800 008
如在维修服务过程中有任何意见，欢迎致函飞利浦优质生活服务办事处解决疑难。

Philips(china)Investment Co.,Ltd.
Philips Consumer Lifestyle
Philips Innovation Campus Shanghai
NO.1 Building, NO.10, Lane 888
Tian Lin Road Shanghai, P.R.C.200233
Fax: +86 21 5445 2663

飞利浦（中国）投资有限公司
飞利浦优质生活客户服务部
中国上海市田林路888弄10号
飞利浦创新科技园1号楼
邮政编码：200233
传真：（021）5445 2663

组成部分

简体中文

1 重要事项 2
安全 2

2 您的加湿器 4
产品概述 4
控件概述 4

3 使用入门 5
安装纳米级劲护滤网 5
加湿准备 5

4 使用产品 6
打开和关闭 6
设置湿度级别 6
更改风扇速度 7
设置计时器 7
设置儿童锁 7
水位 7

5 清洁 8
清洁计划 8
清洁产品机身 8
清洁水箱、蓄水盘和纳米云旋转式加湿滤网 8
清洁预过滤网 9
为纳米云旋转式加湿滤网除垢 9

6 更换劲护滤网和加湿滤网 10
了解健康空气智能锁 10
更换纳米级劲护滤网 10
更换纳米云旋转式加湿滤网 10
更换抗菌滤芯（仅限 HU5931） 11

7 故障排除 12

8 保修与服务 14
订购部件或附件 14

9 注意事项 14
电磁场 (EMF) 14
回收 14

1 重要事项

安全

使用本产品之前，请仔细阅读本用户手册，并妥善保管以备日后参考。

危险

- 切勿让水或任何其它液体或易燃性清洁剂进入产品，以免发生触电和/或火灾。
- 切勿用水或任何其它液体或（易燃性）清洁剂来清洁产品，以免发生触电和/或火灾。
- 切勿在产品周围喷洒杀虫剂或香水等任何可燃材料。
- 水箱中的水不适合饮用。请勿饮用这些水，也不要用它们喂养动物或浇花。清空水箱时，请将水倒入水槽。

警告

- 在将产品接通电源以前，首先确认产品底部所标示的电压是否与当地的电压相符。
- 如果电源软线损坏，为避免危险，必须由制造厂或其维修部或类似的专职人员来更换。
- 如果插头、电源线或产品本身受损，请勿再使用本产品。
- 本产品适合由 8 岁或以上年龄的儿童以及肢体不健全、感觉或精神上有障碍或缺乏相关经验和知识的人士使用，但前提是有人对他们使用本产品进行监督或指导，以确保他们安全使用，并且让他们明白相关的危害。不要让儿童进行清洁和保养，除非儿童已年满 8 周岁且在有人监督的情况下。
- 应照看好儿童，避免他们玩耍本产品。
- 请勿堵塞进风和出风口，例如不要将物体放置在出风口上或进风口前方。
- 请勿食用或玩耍抗菌滤芯（仅限 HU5931）。

警告

- 本产品不能替代正常通风、日常吸尘或者在烹饪时使用的抽油烟机。
- 如果连接产品的电源插座接触不良，则产品的插头可能会变得很热。确保所连接的电源插座接触良好。
- 一定要在干燥、稳固、平整且水平的表面上放置和使用本产品。
- 产品的后侧及两侧均要留出至少 20 厘米的空间，产品上方至少要留出 30 厘米的空间。
- 切勿在产品顶部放置任何物品，也不要坐在产品上。
- 切勿将产品直接放在空调下方，以防冷凝水滴到产品中。
- 打开产品电源之前，务必确保已经正确安装所有过滤网。
- 只能使用飞利浦专门为本产品设计的原装过滤网。切勿使用任何其它过滤网。
- 请勿用硬物敲击本产品（尤其是进风口和出风口）。
- 请务必通过产品两端的手柄提起或移动产品。
- 请勿将手指或物体插入出风口或进风口，以防止产品出现物理损坏或发生故障。
- 当您使用室内喷雾式驱虫剂或在充满油污、易燃气体或化学烟雾的地方时，请勿使用本产品。
- 请勿在气体用具、加热装置或火炉附近使用本产品。

- 使用之后以及注水、清洁产品或执行其他维护之前，务必拔掉电源插头。
- 请勿在温度变化较大的房间内使用本产品，因为这可能导致产品内部的冷凝。
- 为防止产生干扰，产品与使用无线电波的电器（例如电视机、收音机和无线电控制时钟）之间至少应保持 2 米距离。
- 当产品长期不用时，过滤网上可能会生长细菌。长时间不用之后，请仔细检查过滤网。如果过滤网非常脏，请进行更换（请参阅“更换过滤网”一章）。
- 本产品仅限于家用并在正常运行条件下使用。
- 请勿在潮湿环境或高温环境中（例如浴室、卫生间或厨房）使用本产品。
- 本产品不能去除一氧化碳 (CO) 或氡 (Rn)， 因此在发生燃烧和危险化学品事故时，不能作为安全设备使用。
- 每天清洁水箱，使其保持洁净。
- 只能向水箱中注入冷水。切勿使用地下水或热水。
- 切勿将水以外的任何物质放入水箱。切勿将香水倒入水箱中。
- 如果您长时间不使用加湿功能，请清洁水箱和纳米云旋转式加湿滤网托盘，并将纳米云旋转式加湿滤网晾干。
- 如果需要移动产品，请先断开产品的电源。然后倒空水箱和蓄水盘。握住产品两侧的手柄水平移动产品。

2 您的加湿器

感谢您的惠顾，欢迎光临飞利浦！

为充分享受飞利浦提供的支持，请在 www.philips.com/welcome 注册您的产品。

飞利浦加湿器可为您的房间带来清新湿润空气，以保证家人的健康。本产品具有采用了 NanoCloud 技术的高级蒸发系统，使用特殊加湿滤网向干燥的空气中添加水分子，并产生健康的湿润空气，而不会形成水雾。其加湿滤网可以吸附水中的细菌、水垢和其他微粒。它只向您家中提供纯净的湿润空气。冬季或使用空调时不再有干燥的空气。

使用本产品之前，请仔细阅读本用户手册，并妥善保管以备日后参考。

产品概述（图 ①）

A	控制面板
B	水箱
C	加湿滤网支座
D	蓄水盘
E	纳米云旋转式加湿滤网 (**FY5156**)
F	加湿滤网轮盘
G	抗菌滤芯 (**FY5131**)（仅限 **HU5931**）
H	后面板
I	预过滤网
J	纳米级劲护滤网 (**FY1114**)
K	出风口

控件概述（图 ②）

L	空气湿度光环（仅限 **HU5931**）
M	儿童锁按钮
N	预约按钮
O	风扇速度按钮
P	开/关钮
Q	湿度级别按钮
R	温度按钮
S	光线开/关按钮
T	显示屏
U	重置按钮

3 使用入门

安装纳米级劲护滤网

产品内部随附纳米级劲护滤网。使用产品之前，请先除去滤网的包装。取下纳米级劲护滤网，拆除包装，然后按如下所述将其放回到产品中：

注意

- 确保带拉片的一面朝向您。
- 预过滤网安装在后面板内侧。

1 将后面板顶部拉向自己，将其从产品上释放（图 ③）。
2 将纳米级劲护滤网从产品上取下（图 ④）。
3 除去纳米级劲护滤网的所有包装材料（图 ⑤）。
4 将纳米级劲护滤网放回产品中（图 ⑥）。
5 要重新安装后面板，请先将面板安装到产品底部，然后朝产品方向推动面板顶部（图 ⑦）。

加湿准备

1 拉出水箱（图 ⑧）。
2 拉出蓄水盘（图 ⑨）。
3 除去纳米云旋转式加湿滤网的所有包装材料（图 ⑩）。

注意

- 加湿滤网在您购买产品时已经组装在加湿滤网轮盘上。

4 将加湿滤网轮盘放在滤网支座上（图 ⑪）。

注意

- 将加湿滤网轮盘放在滤网支座上时，请确保加湿滤网轮盘上的凸起部位卡入相应的凹槽。

5 将蓄水盘放回产品中（图 ⑫）。
6 逆时针旋开水箱顶盖（图 ⑬）。
7 向水箱中注入冷水（图 ⑭）。
8 顺时针旋转顶盖将其牢牢锁定到水箱上（图 ⑮）。
9 将水箱放回产品中（图 ⑯）。

4 使用产品

打开和关闭

1 将电源插头接入插座。
   ↳ 产品会发出声音。对于 **HU5931**，所有指示灯均亮起一次，然后再熄灭。
2 轻触 ⏻ 可打开产品（图 ⑰）。
   ↳ 产品默认在自动风速下工作，默认湿度设置为 "- -"。
   ↳ 当前湿度级别会显示在屏幕上。
3 轻触并按住 ⏻ 3 秒可关闭产品（图 ⑱ & ⑲）。

注意

- 通过开/关按钮 ⏻ 关闭产品后，如果插头仍在插座中，再次打开产品时，其将根据上次的设置工作。

提示

- 轻触指示灯开/关按钮 💡 可打开或关闭指示灯和显示屏。
- 轻触温度按钮 🌡 一次，当前温度将在屏幕上显示 3 秒。此后，将显示当前湿度级别（图 ⑳）。

设置湿度级别

1 反复轻触湿度按钮 💧，将所需空气湿度设置为 40%、50% 或 60%（图 ㉑）。

注意

- 当选择湿度级别“- -”时，湿度光环将熄灭。 该产品将一直为房间加湿，直到环境湿度级别达到 70%RH。
- 在自动模式下，达到目标湿度级别时，产品将按照风扇速度 1 运行。在手动风扇速度模式下，产品将继续按照所选的风扇速度运行。
- 达到目标湿度级别时，加湿滤网轮盘将停止旋转。当湿度低于目标级别时，产品将再次开始旋转。
- 如果您想快速提高湿度级别，则可以选择更高的风扇速度。
- 对于 **HU5931**，空气湿度光环指示是否达到目标湿度级别。达到湿度级别时，呈蓝色亮起；环境湿度低于预设设置时，呈红色亮起。

更改风扇速度

自动 (Ⓐ)

在自动模式下，产品会根据环境空气湿度选择风扇速度。

1 轻触风扇速度按钮 选择自动 (Ⓐ)（图 ㉒）。

手动

1 反复轻触风扇速度按钮 可选择所需的风扇速度（**1**、**2**、**3** 或 **4**）（图 ㉓）。

注意

- 风扇速度 **4** 仅适用于 **HU5931**。

设置计时器

使用计时器，可设定产品运行的小时数。到达设定的时间时，产品将自动关闭。

1 反复轻触计时器按钮 可选择您想要产品运行的小时数（图 ㉔）。
   ↳ 计时器的设置范围为 1 至 8 小时。

要禁用计时器功能，请反复轻触计时器按钮 ，直至屏幕上显示 - -（图 ㉕）。

设置儿童锁

1 轻触并按住儿童锁按钮 3 秒可激活儿童锁（图 ㉖ & ㉗）。
   ↳ 打开儿童锁时，其他所有按钮均将没有反应。

2 再次轻触并按住儿童锁按钮 3 秒可禁用儿童锁。

水位

可通过水箱上的水位窗看见水箱中的水位。

水箱中的水量不足时，重新注水指示灯 将开始闪烁，以指示必须为水箱加水（图 ㉘）。

注意

- 水箱中无水时，加湿滤网轮盘将停止旋转。在自动模式下，产品将按照风扇速度 1 运行。在手动风扇速度模式下，产品将继续按照所选的风扇速度运行。水箱重新注水后，加湿滤网轮盘将再次开始旋转。

5 清洁

注意

- 清洁前务必拔掉电源插头。
- 切勿将本产品浸入水中或任何其它液体中。
- 切勿使用研磨性、腐蚀性或易燃性清洁剂（例如漂白剂或酒精）清洁本产品的任何部件。
- 只有预过滤网和纳米云旋转式加湿滤网可以水洗。纳米级劲护滤网不可水洗，也不可用真空吸尘器清洁。

清洁计划

频率	清洁方法
必要时	使用干软布清洁产品表面。
每周	冲洗水箱、蓄水盘和纳米云旋转式加湿滤网。
当清洁图标 亮起时	清洁预过滤网。
	用水和白醋（醋酸度为5%）为纳米云旋转式加湿滤网除垢。

清洁产品机身

定期清洁产品的内侧和外侧，防止灰尘积聚。

1 使用柔软的干布擦去产品机身上的灰尘。
2 用柔软的干布擦拭出风口。

清洁水箱、蓄水盘和纳米云旋转式加湿滤网

注意

- 每周清洁水箱、蓄水盘和纳米云旋转式加湿滤网，使其保持清洁卫生。

1 拉出水箱（图 ⑧）。
2 拉出蓄水盘（图 ㉙）。
3 将加湿滤网轮盘从滤网支座上取下（图 ㉚）。
4 用自来水冲洗水箱、蓄水盘和纳米云旋转式加湿滤网。

注意

- 清洁过程中，请勿将纳米云旋转式加湿滤网从轮上取下。
- 不要擦洗纳米云旋转式加湿滤网或将其置于阳光直射的地方。
- 如有必要，请使用温和的清洁剂清洁水箱和蓄水盘。在这种情况下，彻底冲洗水箱和蓄水盘。

5 将水箱外侧和蓄水盘擦干。
6 将加湿滤网轮盘放在滤网支座上（图 ⑪）。

注意

- 将加湿滤网轮盘放在滤网支座上时，请确保加湿滤网轮盘上的凸起部位卡入相应的凹槽。

7 将蓄水盘放回产品中（图 ⑫）。
8 将水箱放回产品中（图 ⑯）。

清洁预过滤网

滤网提示灯状态	按此操作
清洁指示灯 亮起（图 31）	清洁预过滤网

注意

- 只有预过滤网和纳米云旋转式加湿滤网可以水洗。纳米级劲护滤网不可水洗。

1 将后面板顶部拉向自己，将其从产品上释放（图 3）。
2 要卸下预过滤网，请向下按两个固定夹，然后朝您自己的方向拉动过滤网（图 32）。
3 在水龙头下冲洗预过滤网。如果预过滤网很脏，请使用软刷清除上面的灰尘（图 33）。
4 晾干预过滤网。

注意

- 确保预过滤网完全干燥。如果仍然是湿的，细菌可能会乘虚而入，因此缩短预过滤网的使用寿命。

5 预过滤网完全干燥后，将其放回后面板中（图 34）。
6 轻触并按住重置按钮 3 秒可重置预过滤网清洁时间（图 35）。

为纳米云旋转式加湿滤网除垢

滤网提示灯状态	按此操作
清洁指示灯 亮起（图 31）	为纳米云旋转式加湿滤网除垢

1 拉出水箱（图 8）。
2 拉出蓄水盘（图 29）。
3 将加湿滤网轮盘从滤网支座上取下（图 30）。
4 将白醋与等量的自来水倒入能够完全浸泡纳米云旋转式加湿滤网的容器中混合。

注意

- 白醋的醋酸度为 5%。
- 如果过滤网上面有白色残留物（水垢），请确保将带有白色残留物的一面浸入水中。
- 除垢过程中，请勿将纳米云旋转式加湿滤网从轮上取下。

5 让纳米云旋转式加湿滤网在溶液中浸泡 1 小时（图 36）。
6 在水龙头下冲洗纳米云旋转式加湿滤网，以冲洗掉残留的醋。冲洗过程中，翻转加湿滤网，将正面和背面都冲洗干净（图 37）。
7 将纳米云旋转式加湿滤网晾干。

注意

- 请勿将纳米云旋转式加湿滤网置于阳光直射的地方。

8 轻触并按住重置按钮 3 秒可重置纳米云旋转式加湿滤网清洁时间（图 35）。

6 更换劲护滤网和加湿滤网

了解健康空气智能锁

本产品具有健康空气智能锁，旨在确保产品运行过程中，纳米级劲护滤网和纳米云旋转式加湿滤网在最佳条件下工作。当两块滤网使用寿命即将结束并且需要更换时，滤网更换指示灯将开始闪烁。

如果没有及时更换劲护滤网和加湿滤网，产品将停止运行并被锁定。

更换纳米级劲护滤网

注意

- 纳米级劲护滤网不可水洗，也不可用真空吸尘器清洁。

滤网提示灯状态	按此操作
过滤网更换指示灯开始闪烁（图 38）	更换纳米级劲护滤网

1 将用过的纳米级劲护滤网从产品上取下（图 39）。

注意

- 请勿接触滤网的褶皱面，或闻滤网的气味，因为其包含从空气中收集的污染物。
- 弃置用过的滤网后，请洗净双手。

2 除去新的纳米级劲护滤网的所有包装材料（图 5）。

3 将新的纳米级劲护滤网放入产品中（图 6）。

4 轻触并按住重置按钮 3 秒可重置纳米级劲护滤网使用寿命计数器（图 35）。

更换纳米云旋转式加湿滤网

滤网提示灯状态	按此操作
过滤网更换指示灯开始闪烁（图 38）	更换纳米云旋转式加湿滤网

1 将加湿滤网轮盘从滤网支座上取下（图 30）。

2 松开轮边缘的锁定装置（图 40）。

3 握住盘另一侧上的卡扣组件，将加湿滤网从轮盘上释放（图 41）。

4 将用过的纳米云旋转式加湿滤网取出（图 42）。

5 除去新的纳米云旋转式加湿滤网的所有包装材料（图 43）。

6 将新的纳米云旋转式加湿滤网放入加湿滤网轮盘，然后紧固加湿滤网轮盘上的锁定装置（图 44）。

7 将加湿滤网轮盘放在滤网支座上（图 11）。

注意

- 将加湿滤网轮盘放在滤网支座上时，请确保加湿滤网轮盘上的凸起部位卡入相应的凹槽。

8 将蓄水盘和水箱放回产品中。

9 轻触并按住重置按钮 3 秒可重置纳米云旋转式加湿滤网使用寿命计数器（图 35）。

更换抗菌滤芯（仅限 HU5931）

每年至少更换一次抗菌滤芯，以防细菌在蓄水盘中滋生。

1 从蓄水盘上拔掉旧的抗菌滤芯（图 ㊺）。
2 除去新的抗菌滤芯的所有包装材料（图 ㊻）。
3 将新的抗菌滤芯放入蓄水盘中的凹槽（图 ㊼）。
4 将蓄水盘和水箱放回产品中。

7 故障排除

本章归纳了您在使用产品时最常遇到的问题。如果您无法根据下面的信息解决问题，请与您所在国家/地区的客户服务中心联系。

问题	可能的解决方法
产品即使接通电源也无法工作。	• 过滤网更换指示灯 一直闪烁，但您还没有更换纳米级劲护滤网，产品现在已锁定。在此情况下，更换过滤网并重置过滤网使用寿命计数器。 • 重新注水指示灯 闪烁。请确保水箱安装正确，而且水箱中水量充足。
产品即使已开启也无法工作。	产品正在工作，但按钮没有反应。检查儿童锁是否处于开启状态。
纳米云旋转式加湿滤网上有一些白色残留物。	这些白色残留物被称为水垢，它们由水中的矿物质组成。纳米云旋转式加湿滤网上的水垢将影响加湿性能，但不会损害您的健康。请遵照用户手册中的清洁说明。
出风口中无空气排出。	请将产品插入电源并启动产品。
出风口排出的气流比之前明显减弱。	• 预过滤网变脏。清洁预过滤网（请参阅“清洁”一章）。 • 请确保已经除去纳米级劲护滤网的所有包装材料。
达到目标湿度级别需要很长的时间。	NanoCloud 技术可将看不见的水蒸气均匀分配到您的房间内。在干燥条件下，加湿器产生的水分会被墙壁、家具和房间内的其他物品吸收。外部干燥空气的流通也会增加达到目标湿度所需的时间。
我没有看到产品中有水蒸气冒出。产品是否正在工作?	如果雾非常细小，就无法看见。本产品采用 NanoCloud 加湿技术，可从出风口区域产生健康潮湿的空气，而不会形成水雾。因此，您看不到雾。
产品散发出一种奇怪的味道。	前几次使用产品时，其可能会产生塑料味。这是正常的。不过，如果产品发出烧焦的气味，请联系飞利浦经销商或经授权的飞利浦服务中心。当滤网很脏时，产品也可能会发出难闻的气味。在这种情况下，请清洁或更换相关的滤网。

问题	可能的解决方法
产品声音过大。	• 您没有拆掉过滤网上的所有包装材料。请确保您已经取下所有包装材料。 • 更改风扇速度以降低风扇速度级别。
我已经更换过了过滤网，但是产品还是一直指示需要更换滤网。	或许您没有正确地轻触并按住重置按钮 ⮌。插入产品电源插头，轻触 ⏻ 打开产品，然后轻触并按住重置按钮 ⮌ 3 秒。

8 保修与服务

如果您需要了解信息或有任何疑问，请访问飞利浦网站 www.philips.com 或与您所在国家/地区的飞利浦客户服务中心联系（可在全球保修卡中找到其电话号码）。如果您所在的国家/地区没有飞利浦客户服务中心，请向当地的飞利浦经销商求助。

订购部件或附件

如果您必须更换部件或需要购买额外的部件，请转到您的飞利浦经销商或访问 www.philips.com/support。

如果获取部件有问题，请与您所在国家/地区的飞利浦客户服务中心联系（可在全球保修卡中找到其电话号码）。

9 注意事项

电磁场 (EMF)

本飞利浦产品符合所有有关暴露于电磁场的适用标准和法规。

符合 EMF 标准

Koninklijke Philips N.V. 主要面向广大消费者制造和销售各类产品，包括通常能发射和接收电磁信号的各种电子设备。

飞利浦的主要业务原则之一就是要对自己的产品采取各种必要的健康和安全措施，使其符合所有相应的法律要求，并在制造产品时严格遵照适用的 EMF 标准。

飞利浦致力于开发、生产和销售对人体健康无任何危害的产品。飞利浦确认，据目前的科学证明，如果其产品使用得当，则对人体毫无危害。

长期以来，Philips 始终在国际 EMF 和安全标准的制定工作中扮演着积极的角色，这就使 Philips 总能预知标准的发展趋势，并率先应用到其产品中去。

回收

弃置产品时，请不要将它与一般生活垃圾一同丢弃，应将其交给官方指定的回收中心。这样做有利于环保。

Contents

1 Important 16
Safety 16

2 You humidifier 18
Product overview 18
Controls Overview 18

3 Get started 19
Installing the Nano protect filter 19
Preparing for humidification 19

4 Use the appliance 20
Switching on and off 20
Setting the humidity level 20
Changing the fan speed 20
Setting the timer 21
Setting the child lock 21
Water level 21

5 Cleaning 22
Cleaning schedule 22
Cleaning the body of the appliance 22
Cleaning the water tank, water tray and NanoCloud rotary humidification wick 22
Cleaning the pre-filter 23
Descaling the NanoCloud rotary humidification wick 23

6 Replace the filter and wick 24
Understanding the healthy air protect lock 24
Replacing the Nano protect filter 24
Replacing the NanoCloud rotary humidification wick 24
Replacing the anti-bacteria cartridge (HU5931 only) 25

7 Troubleshooting 26

8 Guarantee and service 28
Order parts or accessories 28

9 Notices 28
Electromagnetic fields (EMF) 28
Recycling 28

1 Important

Safety

Read this user manual carefully before you use the appliance, and save it for future reference.

Danger

- Do not let water or any other liquid or flammable detergent enter the appliance to avoid electric shock and/or a fire hazard.
- Do not clean the appliance with water, any other liquid, or a (flammable) detergent to avoid electric shock and/or a fire hazard.
- Do not spray any flammable materials such as insecticides or fragrance around the appliance.
- The water in the water tank is not suitable for drinking. Do not drink this water and do not use it to feed animals or to water plants. When you empty the water tank, pour the water down the drain.

Warning

- Check if the voltage indicated on the bottom indicated at the rear of the appliance corresponds to the local power voltage before you connect the appliance.
- If the power cord is damaged, you must have it replaced by Philips, a service center authorized by Philips, or similarly qualified persons in order to avoid a hazard.
- Do not use the appliance if the plug, the power cord, or the appliance itself is damaged.
- This appliance can be used by children aged from 8 years and above and persons with reduced physical, sensory or mental capabilities or lack of experience and knowledge if they have been given supervision or instruction concerning use of the appliance in a safe way and understand the hazards involved.
- Cleaning and user maintenance shall not be made by children without supervision.
- Children should be supervised to ensure that they do not play with the appliance.
- Do not block the air inlet and outlet, e.g. by placing items on the air outlet or in front of the air inlet.
- Do not eat or play with the anti-bacteria cartridge (**HU5931** only).

Caution

- This appliance is not a substitute for proper ventilation, regular vacuum cleaning, or use of an extractor hood or fan while cooking.
- If the power socket used to power the appliance has poor connections, the plug of the appliance becomes hot. Make sure that you plug the appliance into a properly connected power socket.
- Always place and use the appliance on a dry, stable, level, and horizontal surface.
- Leave at least 20cm free space behind and on both sides of the appliance and leave at least 30cm free space above the appliance.
- Do not place anything on top of the appliance and do not sit on the appliance.

- Do not place the appliance directly below an air conditioner to prevent condensation from dripping onto the appliance.
- Make sure all filters are properly installed before you switch on the appliance.
- Only use the original Philips filters specially intended for this appliance. Do not use any other filters.
- Avoid knocking against the appliance (the air inlet and outlet in particular) with hard objects.
- Always lift or move the appliance by both handles at the sides of the appliance.
- Do not insert your fingers or objects into the air outlet or the air inlet to prevent physical injury or malfunctioning of the appliance.
- Do not use this appliance when you have used indoor smoke-type insect repellents or in places with oily residues, burning incense, or chemical fumes.
- Do not use the appliance near gas appliances, heating devices or fireplaces.
- Always unplug the appliance after use and before filling water, cleaning, or carrying out other maintenance.
- Do not use the appliance in a room with major temperature changes, as this may cause condensation inside the appliance.
- To prevent interference, place the appliance at least 2m away from electrical appliances that use airborne radio waves such as TVs, radios, and radio-controlled clocks.
- When the appliance is not used for a long time, bacteria may grow on the filters. Check the filters after a long period of disuse. If the filters are very dirty, replace them (see the chapter "Replace the filters").
- The appliance is only intended for household use under normal operating conditions.
- Do not use the appliance in wet surroundings or in surroundings with high ambient temperatures, such as the bathroom, toilet, or kitchen.
- The appliance does not remove carbon monoxide (CO) or radon (Rn). It cannot be used a safety device in case of accidents with combustion processes and hazardous chemicals.
- Clean the water tank every day to keep it clean.
- Only fill the water tank with cold tap water. Do not use ground water or hot water.
- Do not put any substance other than water in the water tank. Do not put fragrance in the water tank.
- If you do not use the humidification function for a long time, clean the water tank and NanoCloud rotary humidification wick tray, and air dry the NanoCloud rotary humidification wick.
- If you need to move the appliance, disconnect the appliance from the power supply first. Then empty the water tank and water tray. Carry the appliance horizontally by the handles on both sides of the appliance.

2 You humidifier

Congratulations on your purchase, and welcome to Philips!

To fully benefit from the support that Philips offers, register your product at www.Philips.com/welcome.

The Philips humidifier brings fresh, humidified air to your house for the health of your family. It offers you advanced evaporation system with NanoCloud technology, using a special humidification filter which adds H2O molecules to the dry air, and produces healthy humid air without formation of water mist. Its humidification filter retains bacteria, calcium and other particles from the water. It delivers only pure humidified air in your home. No more dry air in the winter season or from the air conditioning.

Read this user manual carefully before you use the appliance, and save it for future reference.

Product overview (fig. 1)

A	Control panel
B	Water tank
C	Wick support
D	Water tray
E	NanoCloud rotary humidification wick (**FY5156**)
F	Wick wheel
G	Anti-bacteria cartridge (**FY5131**) (**HU5931** only)
H	Back panel
I	Pre-filter
J	Nano protect filter (**FY1114**)
K	Air outlet

Controls Overview (fig. 2)

L	Air humidity light ring (**HU5931** only)
M	Child lock button
N	Timer button
O	Fan speed button
P	On/off button
Q	Humidity level button
R	Temperature button
S	Light on/off button
T	Display Screen
U	Reset button

3 Get started

Installing the Nano protect filter

The appliance comes with the Nano protect filter fitted inside. Remove the packaging of the filter before using the appliance. Remove the Nano protect filter, unpack it, and place it back into the appliance described as follows:

Note

- Make sure that the side with the tag is pointing towards you.
- The pre-filter is fitted inside of the back panel.

1 Pull the top part of the back panel towards you to release it from the appliance (fig. 3).
2 Remove the Nano protect filter from the appliance (fig. 4).
3 Remove all packaging materials of the Nano protect filter (fig. 5).
4 Place the Nano protect filter back into the appliance (fig. 6).
5 To reattach the back panel, mount the panel onto the bottom of the appliance first, and then push the top of the panel against the appliance (fig. 7).

Preparing for humidification

1 Pull out the water tank (fig. 8).
2 Pull out the water tray (fig. 9).
3 Remove all packaging material of the NanoCloud rotary humidification wick (fig. 10).

Note

- The humidification wick has been assembled on the wick wheel upon purchase.

4 Place the wick wheel on the wick support (fig. 11).

Note

- When placing the wick wheel on the wick support, make sure that the projections on the wick wheel falls into the corresponding grooves.

5 Place the water tray back into the appliance (fig. 12).
6 Turn the top cap of the water tank anti-clockwise to unscrew it (fig. 13).
7 Fill the water tank with cold tap water (fig. 14).
8 Turn the top cap clockwise to tightly lock it onto the water tank (fig. 15).
9 Place the water tank back into the appliance (fig. 16).

4 Use the appliance

Switching on and off

1 Put the plug in the power socket.
   ↳ The appliance sounds. For **HU5931**, all lights go on once and then go out again.
2 Touch ⏻ to switch on the appliance (fig. 17).
   ↳ The appliance operates under the auto fan speed by default, and the default humidity setting is " - - ".
   ↳ The current humidity level will display on the screen.
3 Touch and hold ⏻ for 3 seconds to switch off the appliance (fig. 18 & 19).

Note

- After the appliance is switched off by the on/off button ⏻, if the plug is still in the power socket, the appliance will operate under the previous settings when it is switched on again.

Tip

- Touch the light on/off button 💡 to turn on or off the indicator lights and display screen.
- Touch the temperature button 🌡 once and the current temperature will display on the screen for 3 seconds. After that the current humidity level will display (fig. 20).

Setting the humidity level

1 Touch the humidity button repeatedly to set the desired air humidity to 40%RH, 50%RH, 60%RH or "- -" (fig. 21).

Note

- When the humidity level " - - " is chosen, the humidity light ring will be off. The appliance will keep humidifying the room until the ambient humidity level reaches 70%RH.
- In the auto mode, the appliance will operate under fan speed 1 when the target humidity level is reached. In the manual fan speed mode, the appliance will continue to operate under the chosen fan speed.
- When the target humidity level is reached, the wick wheel will stop rotating. It will start rotating again when the humidity drops below the target level.
- If you want to increase the humidity level quickly, you can select a higher fan speed.
- For **HU5931**, the air humidity light ring indicates whether the target humidity level is reached. It lights up blue when the humidity level is reached and red when the ambient humidity is below the preset setting.

Changing the fan speed

Auto (Ⓐ)

In auto mode, the appliance selects the fan speed in accordance with the ambient air humidity.

1 Touch the fan speed button to select auto (Ⓐ) (fig. 22).

Manual

1 Touch the fan speed button repeatedly to select the desired fan speed (**1**, **2**, **3** or **4**) (fig. 23).

Note

- Fan speed **4** is available for **HU5931** only.

Setting the timer

With the timer, you can let the appliance operate for a set number of hours. When the set time has elapsed, the appliance will automatically switch off.

1 Touch the timer button repeatedly to choose the number of hours you want the appliance to operate (fig. 24).
   ↳ The timer is available from 1 to 8 hours.

To deactivate the timer function, touch the timer button repeatedly until - - displays on the screen (fig. 25).

Setting the child lock

1 Touch and hold the child lock button for 3 seconds to activate child lock (fig. 26 & 27).
   ↳ When the child lock is on, all the other buttons are not responsive.
2 Touch and hold the child lock button for 3 seconds again to deactivate child lock.

Water level

The water level in the water tank is visible through the water level window on the water tank.
When there is not enough water in the water tank, the water refill light flashes to indicate that you have to refill the water tank (fig. 28).

Note

- When there is no water in the water tank, the wick wheel will stop rotating. In the auto mode, the appliance will operate under fan speed 1. In the manual fan speed mode, the appliance will continue to operate under the chosen fan speed. When the water tank is refilled with water, the wick wheel will start rotating again.

English

5 Cleaning

Note

- Always unplug the appliance before cleaning.
- Never immerse the appliance in water or any other liquid.
- Never use abrasive, aggressive, or flammable cleaning agents such as bleach or alcohol to clean any part of the appliance.
- Only the pre-filter and NanoCloud rotary humidification wick are washable. The Nano protect filter is not washable nor vacuum cleanable.

Cleaning schedule

Frequency	Cleaning method
When necessary	Wipe the surface of the appliance with a soft dry cloth.
Every week	Rinse the water tank, the water tray and the NanoCloud rotary humidification wick.
When the cleaning icon lights up	Clean the pre-filter.
	Descale the NanoCloud rotary humidification wick with the water and white vinegar (5% acetic acid).

Cleaning the body of the appliance

Regularly clean the inside and outside of the appliance to prevent dust from collecting.

1 Wipe away dust with a soft dry cloth from the body of the appliance.
2 Clean the air outlet with a soft dry cloth.

Cleaning the water tank, water tray and NanoCloud rotary humidification wick

Note

- Cleaning the water tank, water tray and NanoCloud rotary humidification wick every week to keep them hygienic.

1 Pull out the water tank (fig. 8).
2 Pull out the water tray (fig. 29).
3 Take the wick wheel off the wick support (fig. 30).
4 Rinse the water tank, water tray and NanoCloud rotary humidification wick under a running tap.

Note

- Do not take the NanoCloud rotary humidification wick off the wheel during cleaning.
- Do not scrub the NanoCloud rotary humidification wick or place it under direct sunlight.
- If necessary, use a mild detergent to clean the water tank and water tray. In this case, rinse the water tank and water tray thoroughly.

5 Wipe the outside of the water tank and water tray dry.
6 Place the wick wheel on the wick support (fig. 11).

Note

- When placing the wick wheel on the wick support, make sure that the projections on the wick wheel falls into the corresponding grooves.

7 Place the water tray back into the appliance (fig. 12).
8 Place the water tank back into the appliance (fig. 16).

Cleaning the pre-filter

Filter alert light status	Follow this
Cleaning light goes on (fig. 31)	Clean the pre-filter

Note

- Only the pre-filter and NanoCloud rotary humidification wick are washable. The Nano protect filter is not washable.

1 Pull the top part of the back panel towards you to release it from the appliance (fig. 3).
2 To remove the pre-filter, press the two clips down and pull the filter towards you (fig. 32).
3 Wash the pre-filter under a running tap. If the pre-filter is very dirty, use a soft brush to brush away the dust (fig. 33).
4 Air dry the pre-filter.

Note

- Make sure that the pre-filter is completely dry. If it is still wet, bacteria may multiply in it and shorten the lifetime of the pre-filter.

5 After the pre-filter is completely dry, place it back into the back panel (fig. 34).
6 Touch and hold the reset button for 3 seconds to reset the pre-filter cleaning time (fig. 35).

Descaling the NanoCloud rotary humidification wick

Filter alert light status	Follow this
Cleaning light goes on (fig. 31)	Descale the NanoCloud rotary humidification wick

1 Pull out the water tank (fig. 8).
2 Pull out the water tray (fig. 29).
3 Take the wick wheel off the wick support (fig. 30).
4 Mix the white vinegar with an equal amount of tap water in a container that is large enough to soak the NanoCloud rotary humidification wick in.

Note

- White vinegar has 5% acetic acid.
- If there are white deposits (limescale) on the filter, make sure that the side with the white deposits is immersed in the water.
- Do not take the NanoCloud rotary humidification wick off the wheel during descaling.

5 Let the NanoCloud rotary humidification wick soak in the solution for one hour (fig. 36).
6 Rinse the NanoCloud rotary humidification wick under the tap to rinse away vinegar residues. During rinsing, turn the wick so that both front and back are rinsed (fig. 37).
7 Air dry the NanoCloud rotary humidification wick.

Note

- Do not put the NanoCloud rotary humidification wick under direct sunlight.

8 Touch and hold the reset button for 3 seconds to reset the NanoCloud rotary humidification wick cleaning time (fig. 35).

6 Replace the filter and wick

Understanding the healthy air protect lock

This appliance is equipped with the healthy air protect lock to make sure that the Nano protect filter and the humidification wick are in optimal condition when the appliance is operating. When the Nano protect filter and the humidification wick are almost expired, the replacement light starts to flash to indicate that they need to be replaced.
If you do not replace the filter and wick in time, the appliance will stop operating and get locked.

Replacing the Nano protect filter

Note

- The Nano protect filter is not washable nor vacuum cleanable.

Filter alert light status	Follow this
Filter replacement light starts flashing (fig. 38)	Replace the Nano protect filter

1 Remove the used Nano protect filter from the appliance (fig. 39).

Note

- Do not touch the pleated filter surface, or smell the filter as it has collected pollutants from the air.
- Wash your hands after disposing of the used filters.

2 Remove all packaging material of the new Nano protect filter (fig. 5).
3 Place the new Nano protect filter into the appliance (fig. 6).
4 Touch and hold the reset button for 3 seconds to reset the Nano protect filter lifetime counter (fig. 35).

Replacing the NanoCloud rotary humidification wick

Filter alert light status	Follow this
Filter replacement light starts flashing (fig. 38)	Replace the NanoCloud rotary humidification wick

1 Take the wick wheel off the wick support (fig. 30).
2 Unfasten the locks on the edge of the wheel (fig. 40).
3 Grip the snap-fit components on the other side of the plate to release the wick from the wheel (fig. 41).
4 Take the used NanoCloud rotary humidification wick out (fig. 42).
5 Remove all packaging material of the new NanoCloud rotary humidification wick (fig. 43).
6 Place the new NanoCloud rotary humidification wick in the wick wheel, and then fasten the locks on the wick wheel (fig. 44).
7 Place the wick wheel on the wick support (fig. 11).

Note

- When placing the wick wheel on the wick support, make sure that the projections on the wick wheel falls into the corresponding grooves.

8 Place the water tray and water tank back into the appliance.

9 Touch and hold the reset button ⮌ for 3 seconds to reset the NanoCloud rotary humidification wick lifetime counter (fig. 35).

Replacing the anti-bacteria cartridge (HU5931 only)

Replace the anti-bacteria cartridge at least once a year to prevent bacteria from growing in the water tray.

1 Pull and remove the old anti-bacteria cartridge from the water tray (fig. 45).

2 Remove all packaging materials of the new anti-bacteria cartridge (fig. 46).

3 Place the new anti-bacteria cartridge into the groove in the water tray (fig. 47).

4 Place the water tracy and water tank back into the appliance.

7 Troubleshooting

This chapter summarizes the most common problems you could encounter with the appliance. If you are unable to solve the problem with the information below, contact the Consumer Care Center in your country.

Problem	Possible solution
The appliance does not work even though it is plugged in.	• The filter replacement light has been flashing but you have not replaced the Nano protect filter, and the appliance is now locked. In this case, replace the filter and reset the filter lifetime counter. • The water refill light flashes. Make sure the water tank is properly installed and there is enough water in the water tank.
The appliance does not work even though it is switched on.	The appliance is working but the buttons are not responsive. Check if the child lock is on .
There are some white deposits on the NanoCloud rotary humidification wick.	The white deposits are called scale and they consist of minerals from the water. Scale on the NanoCloud rotary humidification wick affects the humidifying performance, however it does not harm your health. Follow the cleaning instructions in the user manual.
No air comes out of the air outlet.	Plug the appliance into the power supply and switch on.
The airflow that comes out of the air outlet is significantly weaker than before.	• The pre-filter is dirty. Clean the pre-filter (see the chapter "Cleaning"). • Make sure that you have removed all packaging material of the Nano protect filter.
It takes a long time to reach the target humidity level.	NanoCloud technology evenly distributes invisible water vapour into your room. In dry conditions moisture from the humidifier will be absorbed by walls, furniture, and other items in your room. Ventilation of dry outside air will also increase the time it takes to reach the target humidity.
I do not see water vapor coming out of the appliance. Is it working?	When mist is very fine, it is invisible. The appliance has a NanoCloud humidification technology, which produces healthy humid air from the outlet area without formation of water mist. Therefore, you cannot see the mist.

Problem	Possible solution
The appliance produces a strange smell.	The first few times you use the appliance, it may produce a plastic smell. This is normal. However, if the appliance produces a burnt smell, contact your Philips dealer or an authorized Philips service centre. The appliance may also produce an unpleasant smell when one of the filters is dirty. In this case, clean or replace the filter concerned.
The appliance is extra loud.	• You have not removed all packaging material of the filters. Make sure that you have removed all packaging material. • Change the fan speed to lower fan speed level.
The appliance still indicates that I need to replace a filter, but I already did.	Perhaps you did not touch and hold the reset button ⮌ correctly. Plug in the appliance, touch ⏻ to switch on the appliance, and touch and hold the reset button ⮌ for 3 seconds.

8 Guarantee and service

If you need information or if you have a problem, please visit the Philips website at www.philips.com or contact the Philips Consumer Care Center in your country (you find its phone number in the worldwide guarantee leaflet). If there is no Consumer Care Centre in your country, go to your local Philips dealer.

Order parts or accessories

If you have to replace a part or want to purchase an additional part, go to your Philips dealer or visit www.philips.com/support.
If you have problems obtaining the parts, please contact the Philips Consumer Care Center in your country (you can find its phone number in the worldwide guarantee leaflet).

9 Notices

Electromagnetic fields (EMF)

This Philips appliance complies with all applicable standards and regulations regarding exposure to electromagnetic fields.

Compliance with EMF

Koninklijke Philips N.V. manufactures and sells many products targeted at consumers, which, like any electronic apparatus, in general have the ability to emit and receive electromagnetic signals.

One of Philips' leading Business Principles is to take all necessary health and safety measures for our products, to comply with all applicable legal requirements and to stay well within the EMF standards applicable at the time of producing the products.
Philips is committed to develop, produce and market products that cause no adverse health effects. Philips confirms that if its products are handled properly for their intended use, they are safe to use according to scientific evidence available today.
Philips plays an active role in the development of international EMF and safety standards, enabling Philips to anticipate further developments in standardization for early integration in its products.

Recycling

Do not throw away the product with the normal household waste at the end of its life, but hand it in at an official collection point for recycling. By doing this, you help to preserve the environment.